UFACTORY

UFACTORY

GRIPPER G2 USER MANUAL



SHENZHEN UFACTORY CO., LTD.

V 2.7.1

1. Introduction

1.1 Gripper G2 Overview

The Gripper G2 is an end effector tool capable of dynamic grasping.

The range of Gripper G2 is: 0 to 840. A larger value indicates a wider opening of the gripper, while a smaller value indicates a narrower opening.

1.2 Setup and Control

The UFACTORY Gripper G2 establishes power and communication with UFACTORY robotic arms via contact pins or a single cable. The end effector provides 24V power to the gripper and enables serial RS485 communication with the robot controller.

The default baud rate for the UFACTORY Gripper G2 is 2000000.

1.3. Safety

WARNING

Operators must read and understand all instructions in this manual before using Gripper G2.

NOTE

The term "operator" refers to anyone responsible for performing any of the following operations on the Gripper G2:

- Installation
- Control
- Maintenance
- Inspection
- Calibration
- Programming

- Decommissioning

This document describes general operations throughout the lifecycle of Gripper G2, from installation and operation to usage. Graphics and photos in this document are representative examples; they may differ from the delivered product.

1.3.1. Warnings

NOTE

Failure to heed warnings when using the gripper may result in operator injury or equipment damage.

WARNING

- The gripper must be properly secured before operating the robot.
- Do not install or operate a damaged gripper or one with missing parts.
- Never supply AC power to the gripper.
- Ensure all wiring terminals are securely connected at both the robotic arm and gripper ends.
- Always use the recommended electrical connections.
- Before initiating the robot program, ensure no personnel are within the path of the robotic arm and gripper.
- Never exceed the gripper's payload capacity.
- Set the gripper's speed appropriately for your application.
- Keep fingers and clothing away from the gripper when power is on.
- Do not use the gripper on humans or animals.

1.3.2. Risk Assessment and Final Application

Gripper G2 is designed for industrial robots. A risk assessment must be performed for the robot, gripper, and any other equipment used in the final application. It is the robot integrator's responsibility to ensure compliance with all local safety measures and regulations. Depending on the application, additional protective/safety measures may be required due to risks, for example, if the workpiece handled by Gripper G2 poses inherent hazards to operators.

1.3.3. Intended Use

Gripper G2 is used for grasping and temporarily securing or holding objects.

WARNING

Gripper G2 is NOT intended for applying force to objects or surfaces.

This product is designed for installation on robots or other automated equipment.

INFO

- Always comply with local and national laws, regulations, and directives regarding automation safety and general machine safety.
- This equipment may only be used within its specified technical data. Any other use of the product is considered improper and unintended.
- UFACTORY shall not be liable for any damage caused by any improper or unintended use.

2. Installation

WARNING

Before installation:

- Read and understand all safety instructions related to Gripper G2.
- Verify the package contents against the packing list and purchase order.
- Prepare all required parts listed in the requirements.

During installation:

- Meet the environmental conditions.
- Do not operate the gripper or power it on until it is securely mounted and the hazard area is cleared. The gripper fingers may move and cause injury or damage.

2.1. Packing List

The Gripper G2 kit typically includes the following items (as shown in the figure below):

- UFACTORY Gripper G2 (1 unit)
- Gripper G2 adapter cable (spare)
- Cross recessed head screw M6*12 (2 pcs)
- Cross recessed head screw M6*16 (2 pcs)
- Cross recessed head screw M6*22 (2 pcs)

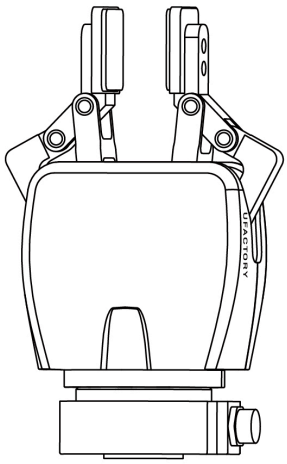

UFACTORY Gripper G2

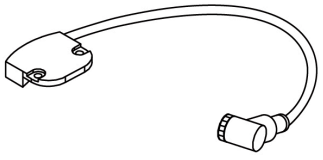

Gripper G2 Adapter Cable (1pcs)

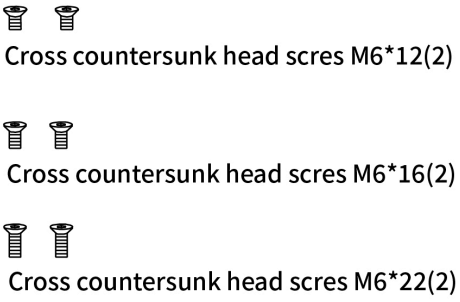

2.2. Mechanical Installation

2.2.1 Installation Preparation

1. Move the robotic arm to a safe position (avoid contact with the installation surface or other equipment);
2. Power off the robotic arm (press the emergency stop button on the controller);

2.2.2 Installation

- **For contact-type arm ends (UF850, XX1305):**
  Secure the gripper to the robotic arm end using 2 M6 screws.

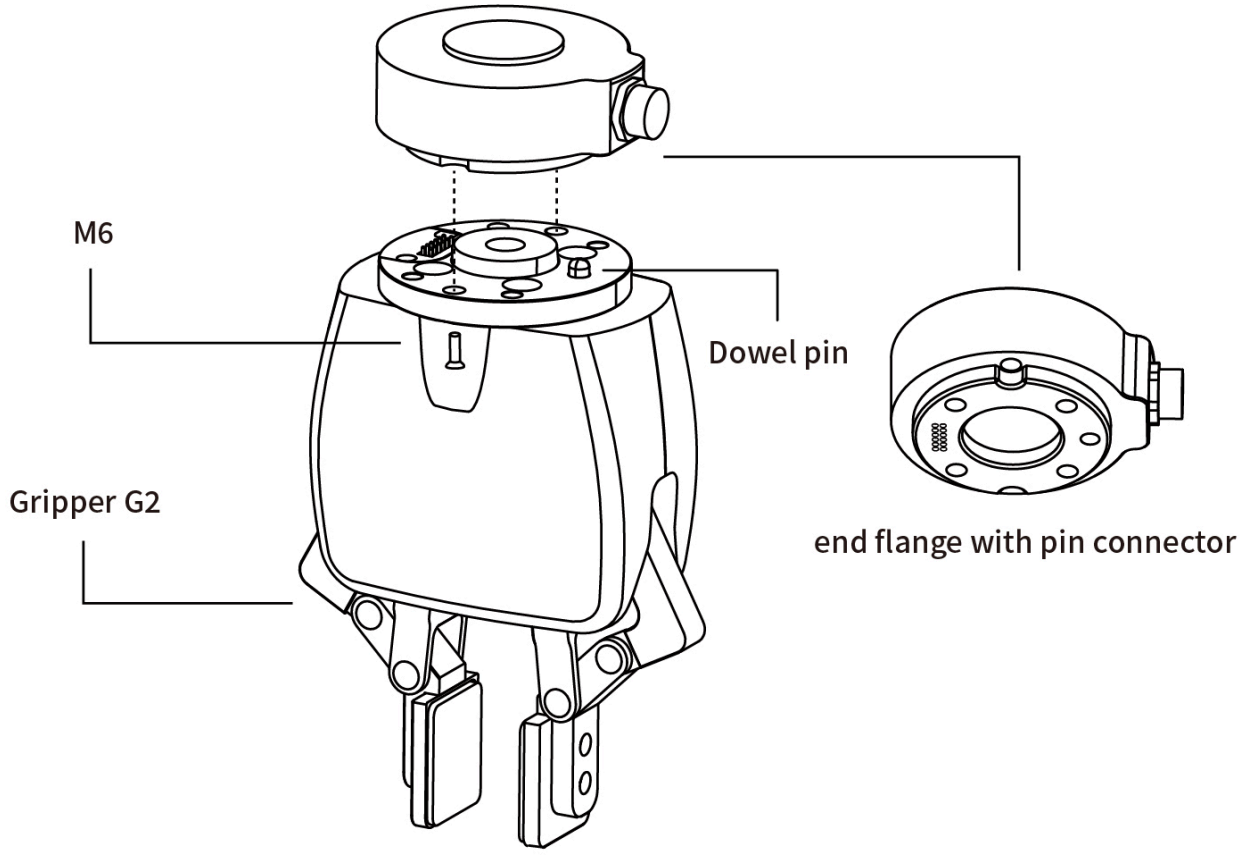

- **For non-contact-type arm ends (XX1304 or below):**

  1. Remove the two screws on the Gripper G2 flange, take off the black cover, and replace it with the silver cover and Gripper G2 adapter cable;

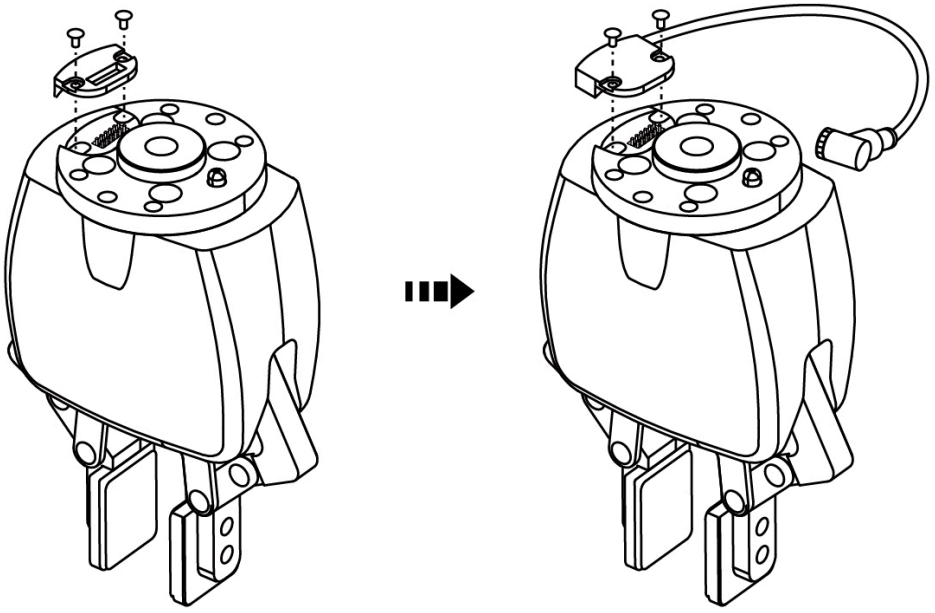

2. Secure Gripper G2 to the robotic arm end using 2 M6 screws;

3. Connect the Gripper G2 adapter cable to the robotic arm end.

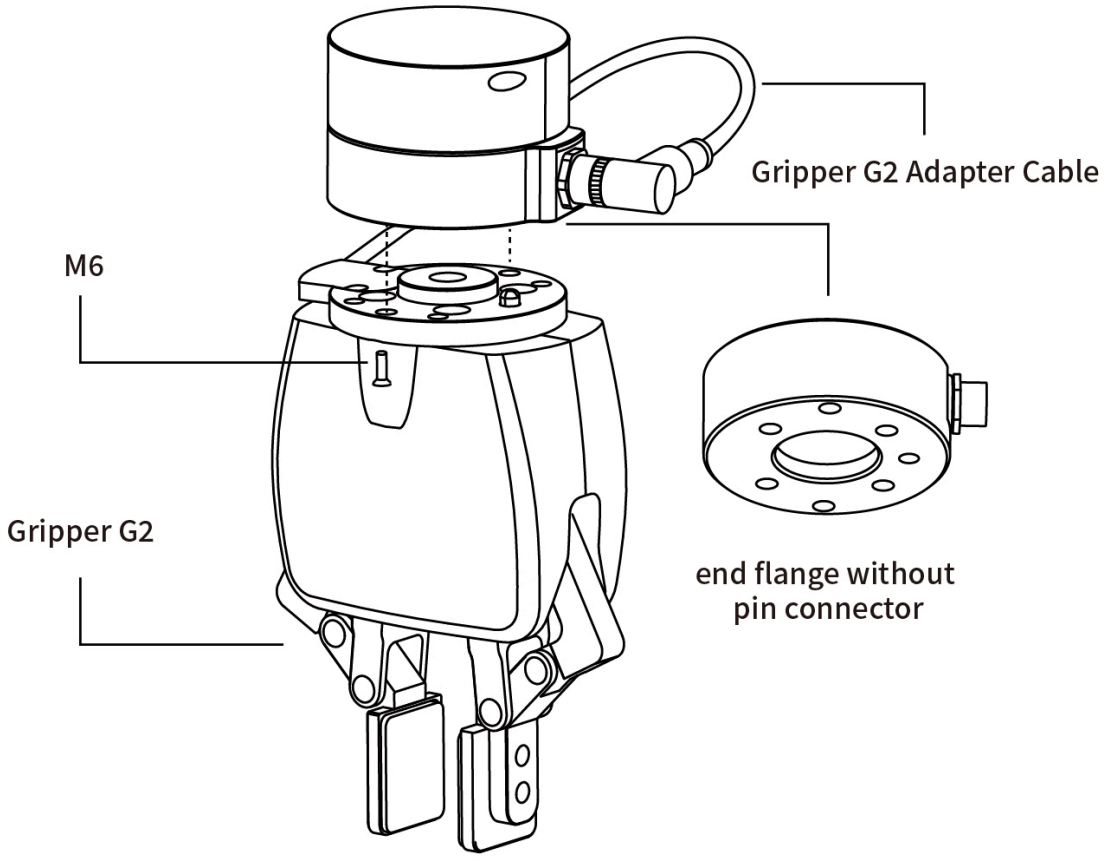

CAUTION:

1. Always power off the robotic arm during Gripper G2 installation. Ensure the emergency stop button is pressed and the power indicator is off to prevent failures caused by hot-plugging.
2. When connecting Gripper G2 to the robotic arm, ensure alignment of positioning holes on both interfaces. The male pins on the Gripper G2 cable are delicate – avoid bending them during installation/removal.

2.3. Electrical Setup

2.3.1 Contact-Type Interface

Contact-type interface definition:

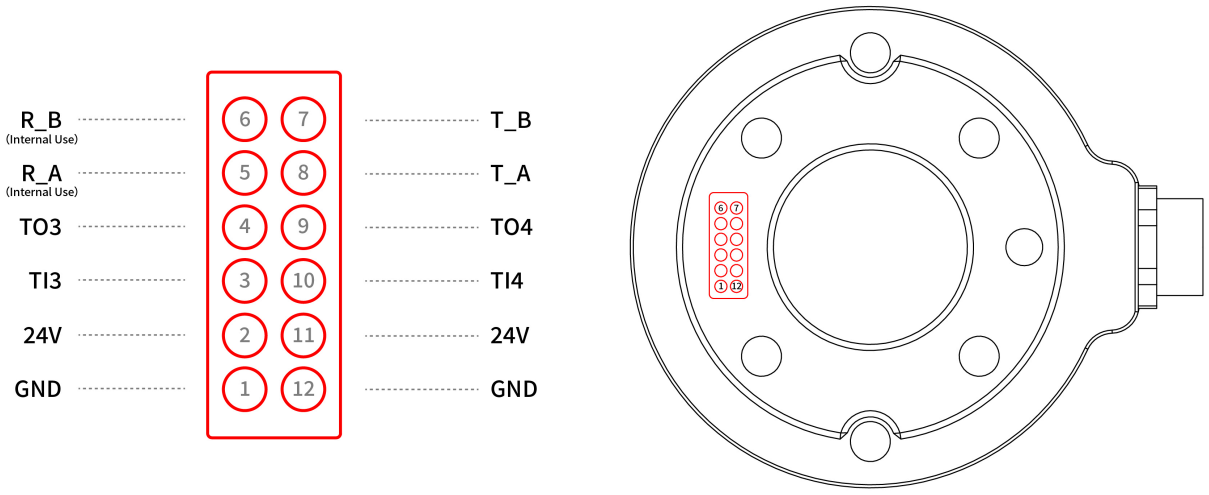

Signals used by Gripper G2: Two 24V, two GND, T_A, T_B.

2.3.2 Aviation Plug Interface

The Gripper G2 aviation plug interface is shown below.

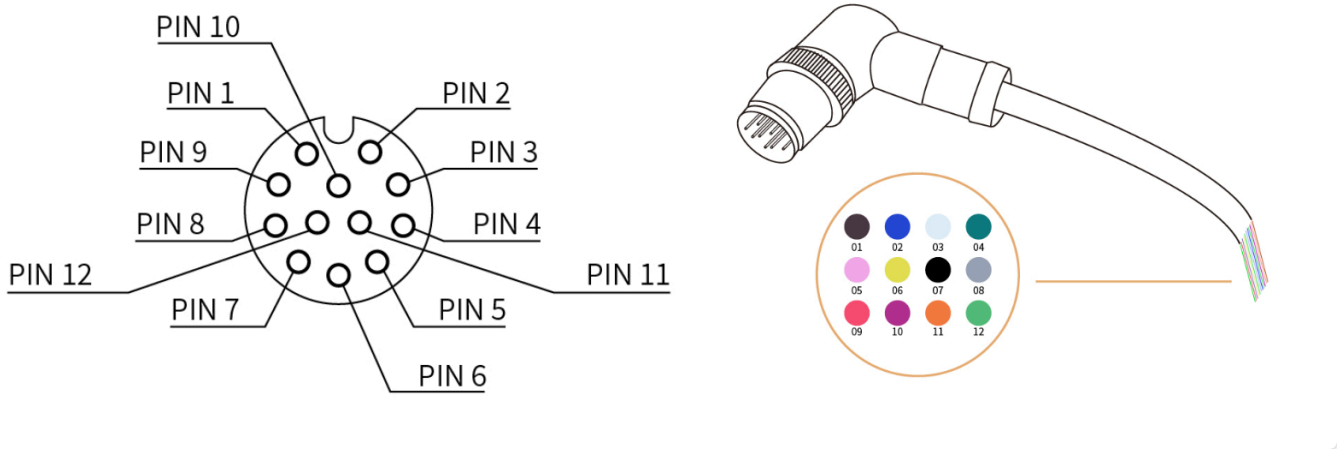

The 12 wires inside the cable have different colors representing different functions. Refer to the table below:

Pin	Color	Signal
1	Brown	+24V (Power)
2	Blue	+24V (Power)
3	White	0V (GND)
4	Green	0V (GND)
5	Pink	User 485-A
6	Yellow	User 485-B
7	Black	Tool Output 0 (TO0)
8	Gray	Tool Output 1 (TO1)
9	Red	Tool Input 0 (TI0)
10	Purple	Tool Input 1 (TI1)
11	Orange	Analog Input 0 (AI0)
12	Light Green	Analog Input 1 (AI1)

Signals used by Gripper G2: 24V (PIN1 and PIN2), GND (PIN3 and PIN4), 485A (PIN5), 485B (PIN6).

3. Control Methods

Programmable Parameters:

- Position: 0-840mm;
- Speed: 15-225mm/s;
- Force: 1-100 (percentage), The force setting value is expressed as a percentage, so refer to the following chart for the corresponding actual force.

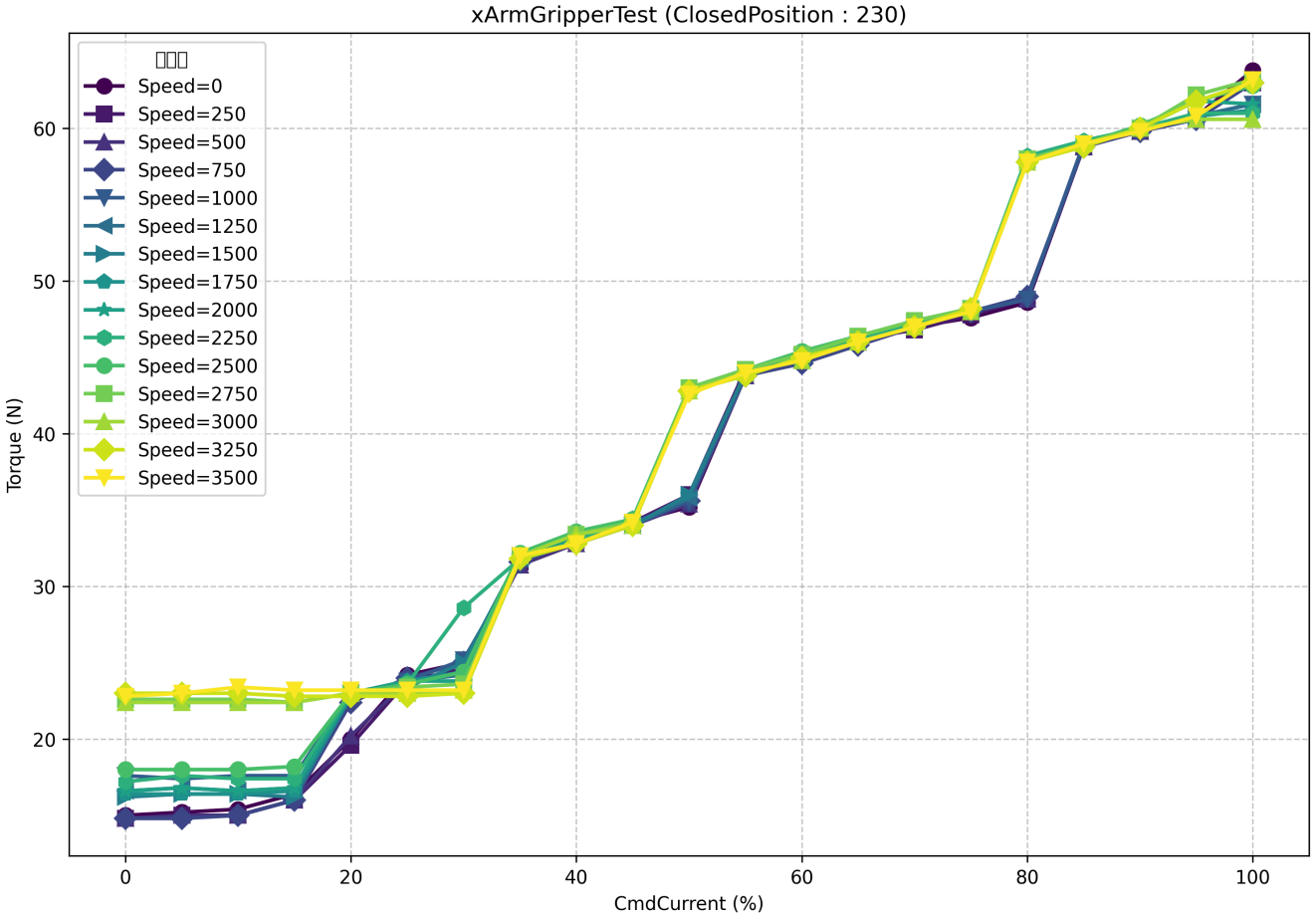

3.1 UFACTORY Studio

3.1.1 Live Control

Enter the Live control page, select Gripper G2, and perform position control (range 0-840). Click the button in the upper right corner to select connection mode and adjust gripping force/speed.

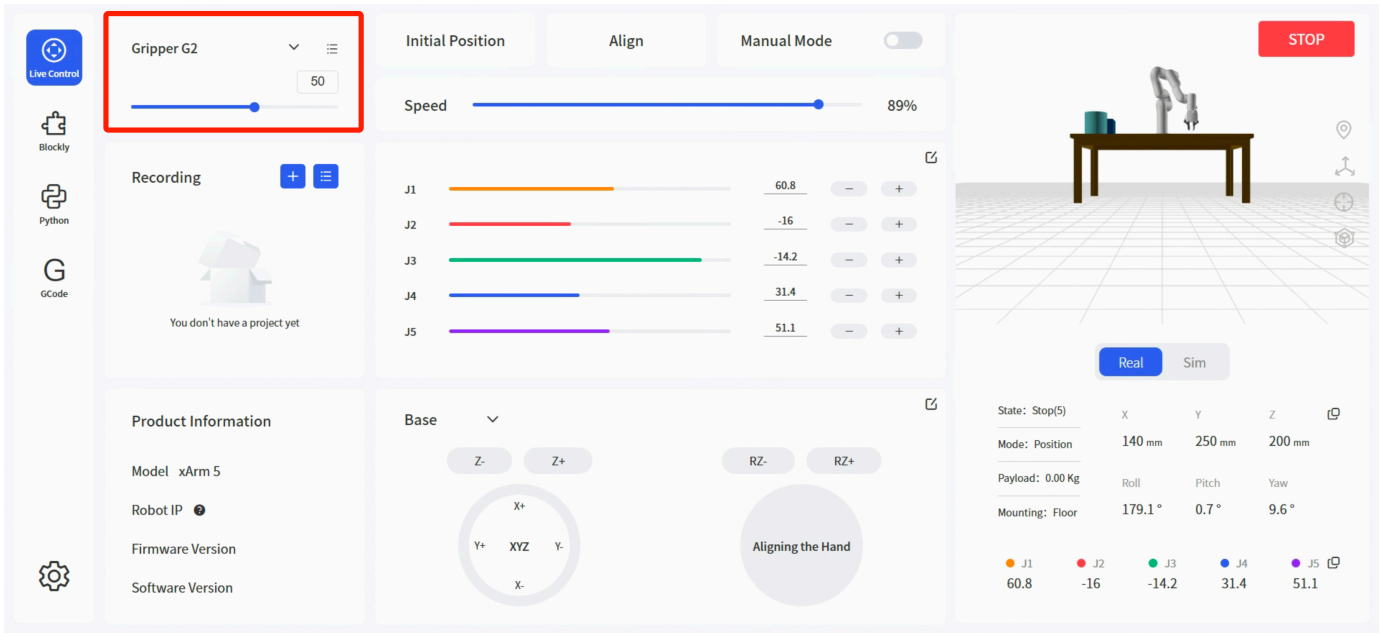

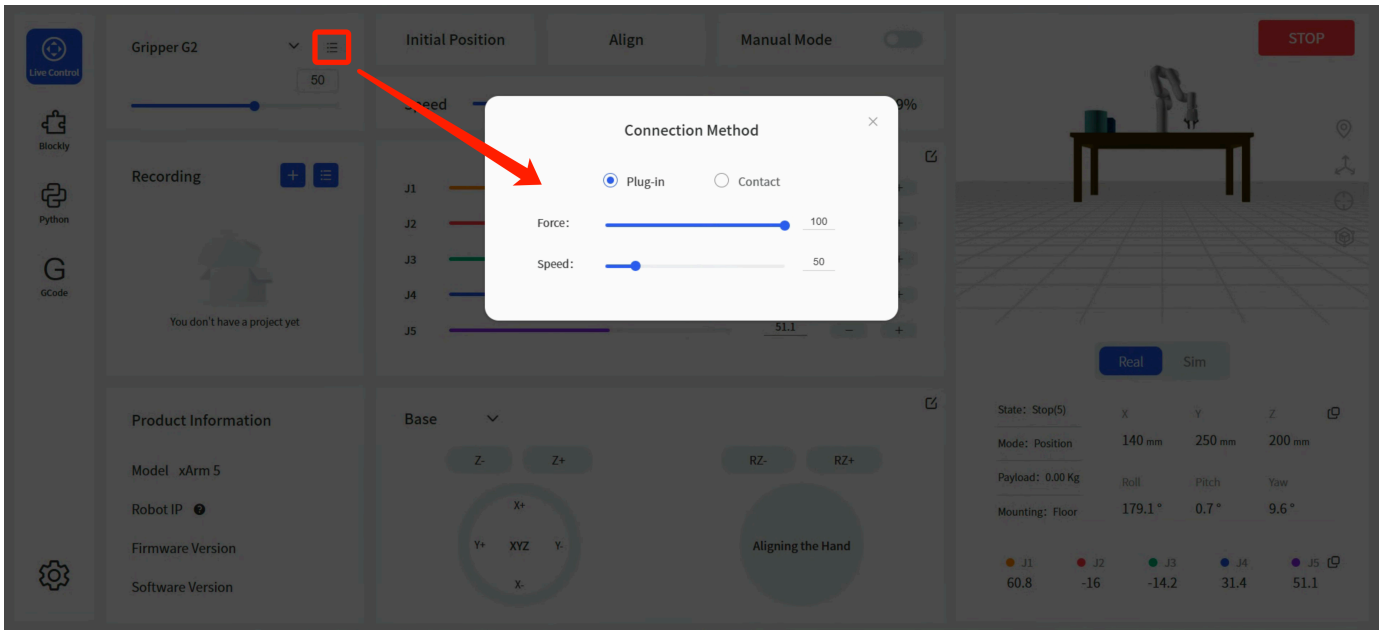

3.1.2 Blockly Control

Blockly provides 3 blocks for Gripper G2 control:

- Set Gripper G2 pos[] speed[] force[] wait[]
- Set Gripper G2 [variable] pos[] speed[] force[] wait[]
- Object gripped by Gripper G2 timeout[]

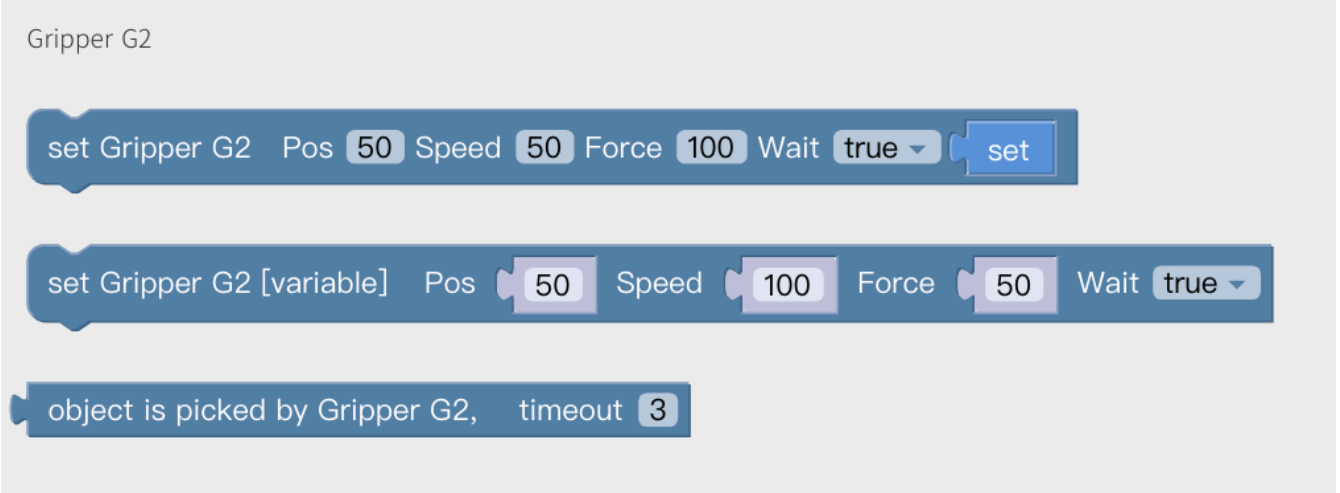

3.1.3 Modbus RTU Control

Go to Settings → External Devices → RS485, select Modbus RTU protocol, and send corresponding commands.

Refer to Chapter 4: Modbus RTU Protocol for details.

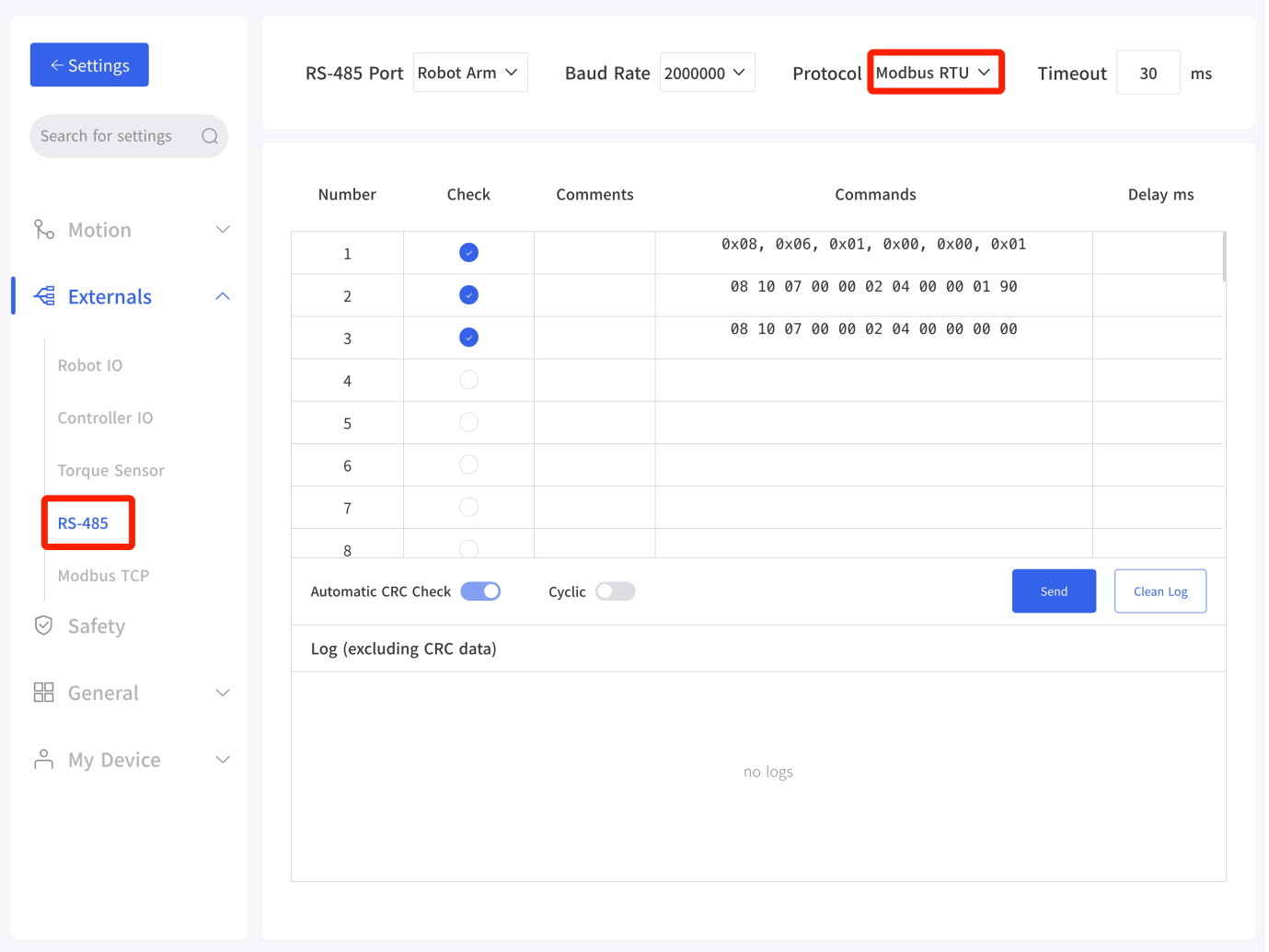

3.1.4 UFACTORY Private TCP Control

Go to Settings → External Devices → Modbus TCP, select 'UFACTORY Private TCP', and send proprietary TCP commands.

Refer to Appendix for UFACTORY Private TCP details.

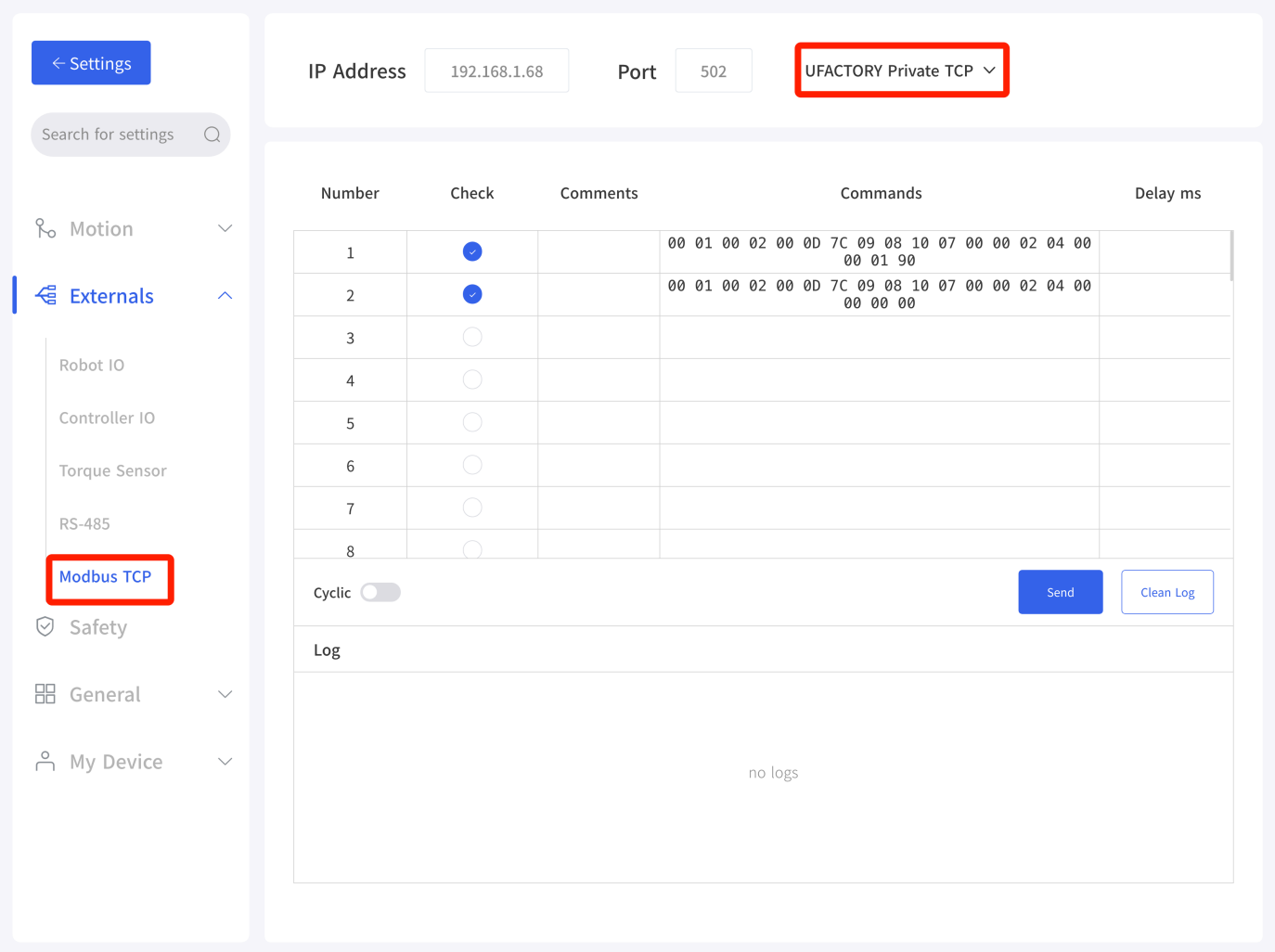

3.2 Python SDK

Common interfaces (Python SDK ≥ 1.16.0):

`set_gripper_g2_position`: Set Gripper G2 position, force, and speed

`get_gripper_g2_position`: Get current Gripper G2 position

Python example:

```python
import os
import sys

sys.path.append(os.path.join(os.path.dirname(__file__), '../../..'))
```

```python
from xarm.wrapper import XArmAPI

arm = XArmAPI('192.168.1.68')
arm.motion_enable(enable=True)
arm.set_mode(0)
arm.set_state(state=0)

code = arm.set_gripper_enable(True)
print('set gripper enable, code={}'.format(code))

code = arm.set_gripper_g2_position(80, wait=True, speed=200, force=80)
print('set gripper, code={}'.format(code))

print('position=', arm.get_gripper_g2_position())
```

4. Modbus RTU Control

4.1 Register Address Description

Gripper G2 supports standard Modbus RTU protocol with default baud rate of 2Mbps and gripper ID 0x08. Supported function codes: 0x03/0x06/0x10.

- 0x03: Read Holding Registers
- 0x06: Write Single Register
- 0x10: Write Multiple Registers

4.1.1 Monitoring Group:

Address	Description
0x0000	Operation Status
0x0001	Speed (r/min)
0x0002	Q-axis Current
0x0003	Bus Current
0x0004	Command Position (p)
0x0006	Motor Position (p)
0x0008	Position Error (p)
0x000F	Current Error Code

Status (0x0000)

Bits 1:0	00: Stopped	Bits 3:2	00: Disabled
	01: Moving		10: Enabled
	10: Grasping		

4.1.2 Fn1xx Control Parameters

Address	Description	Range	Unit	Default
Fn100	Gripper Enable	0-1	-	0
Fn109	Fault Reset	0-1	-	0

4.1.3 Fn3xx Speed Parameters

Address	Description	Range	Unit	Default
Fn303	Speed Cmd	0-0xFFFF	r/min	2000

4.1.4 Fn5xx Torque Parameters

Address	Description	Range	Unit	Default
Fn500	Grasp Current Cmd	0-100	-	50

4.1.5 Fn6xx Communication Parameters

Address	Description	Range	Unit	Default
Fn600	Device ID	1-255	-	8
Fn601	Baud Rate	0: 4800 1: 9600 2: 192008: 9216009: 1M10: 1.5M11: 2M	bps	11

4.1.6 Fn7xx Position Command Group

Address	Description	Range	Unit	Default
Fn700	Position Cmd High	0-0xFFFF	-	-
Fn701	Position Cmd Low	0-0xFFFF	-	-
Fn702	Position Fdbk High	0-0xFFFF	-	0
Fn703	Position Fdbk Low	0-0xFFFF	-	0

4.1.7 FnCxx Gripper Control Registers

Address	Description	Range	Unit	Default
FnC00	Gripper Enable	0-1	-	0
FnC01	Speed Command	0-0xFFFF	-	2000
FnC02	Grasp Current Cmd	0-100	-	50
FnC03	Position Cmd High	0-0xFFFF	-	
FnC04	Position Cmd Low	0-0xFFFF	-	

4.2 FnCxx Register Usage Instructions

FnCxx Control Registers			
Request Format			
Modbus RTU Data	Gripper ID	1 Byte	0x08
	Function Code	1 Byte	0x10
	Start Address	2 Bytes	0x0C, 0x00
	Register Count	2 Bytes	0x00, 0x05
	Byte Count	1 Byte	0x0A
	Gripper Enable	2 Bytes	0x00, 0x01
	Speed (3000)	2 Bytes	0x0B, 0xB8
	Current (50)	2 Bytes	0x00, 0x32
	Position (850)	2 Bytes	0x03, 0x52
	CRC16	2 Bytes	0x17, 0x4E
Response Format			
Modbus RTU Data	Gripper ID	1 Byte	0x08
	Function Code	1 Byte	0x10

FnCxx Control Registers			
	Start Address	2 Bytes	0x0C, 0x00
	Register Count	2 Bytes	0x00, 0x05
	CRC16	2 Bytes	0x03, 0xC3

4.3 Modbus RTU Examples

1. Enable gripper. Address (0x0100)

```
Tx: 08 06 01 00 00 01 49 6F
Rx: 08 06 01 00 00 01 49 6F
```

2. Set gripper position to 100. Address (0x0700)

```
Tx: 08 10 07 00 00 02 04 00 00 00 64 FA E8
Rx: 08 10 07 00 00 02 40 25
```

3. Read error code. Address (0x000F)

```
Tx: 08 03 00 0F 00 01 B4 90
Rx: 08 03 02 00 00 64 45
```

4. Set gripper enable, position(850), speed(3000), force(50). Address (0x0Cxx)

```
Tx: 08 10 0C 00 00 05 0a 00 01 0b b8 00 32 03 52 17 4E
Rx: 08 10 0C 00 00 05 03 C3
```

5. Errors and Handling

5.1 Error Codes

Software Error Code	Alarm Code	Handling Instructions
G1	0x01	Gripper G2 FOC operation timeout, please clear the error and try again.
G2	0x02	Gripper G2 overvoltage.
G3	0x03	Gripper G2 undervoltage.
G4	0x04	Gripper G2 overheating.
G6	0x06	Gripper G2 Gripper G2 speed feedback fault.
G7	0x07	Gripper G2 Overcurrent. Please click "OK" to re-enable the gripper.
G8	0x08	Gripper G2 MCSDK software error.
G9	0x09	Gripper G2 driver protection.

For alarm codes not listed above: Re-enable the robotic arm and gripper. Contact technical support if errors persist.

5.2 Error Handling

5.2.1 Clearing Errors via UFACTORY Studio

1. Power cycle the robotic arm using the emergency stop button on controller.
2. Enable the arm: Click the guide button in the error popup or the enable button on Live Control page.
3. Select Gripper G2 and control.

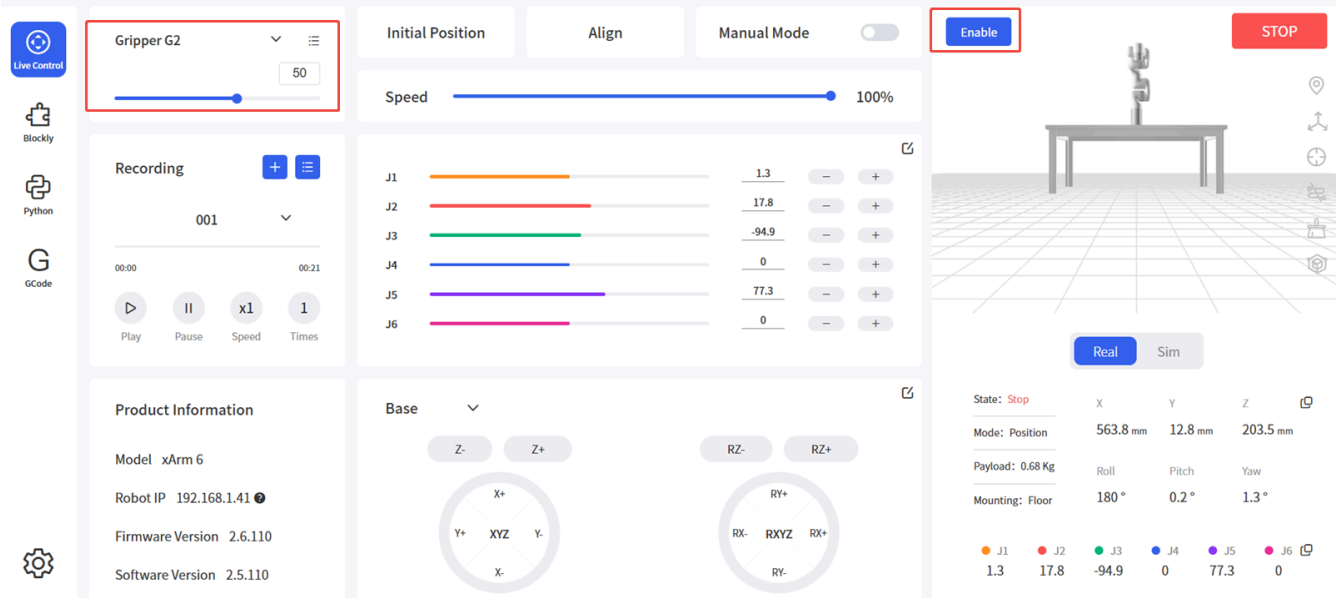

5.2.2 Clearing Errors via xArm-Python-SDK

Clearing steps: (Python-SDK API)

1. Power cycle robotic arm using emergency stop button
2. Clear errors: `clean_error()`
3. Re-enable arm: `motion_enable(enable=True)`
4. Set motion mode: `set_mode(0)`
5. Set motion state: `set_state(0)`
6. Enable Gripper G2: `set_gripper_enable(enable=True)`

Python example:

```python
import os
import sys
import time

sys.path.append(os.path.join(os.path.dirname(__file__), '../../..'))

from xarm.wrapper import XArmAPI

arm = XArmAPI('192.168.1.68')
arm.clean_error() # Clear errors
arm.motion_enable(enable=True) # Re-enable robotic arm
arm.set_mode(0) # Set motion mode
```

```
arm.set_state(0) # Set motion state
arm.set_gripper_enable(True)  # Enable Gripper G2
```

6. Technical Specifications

6.1 Specifications

Gripper G2 (AG1200)	
Rated Supply Voltage	24V DC 1.5A Max
Absolute Maximum Supply Voltage	28V DC
Minimum power consumption	1W
Gripper Weight	820g
Payload	5kg
Stroke	84±1mm
Finger Type	Replaceable
Gripping Force	10-50N
Rated Torque	0.22 N·m
Peak Torque	0.5 N·m
Torque Constant Kt	0.09 N·m/A
Closing Speed	15-225mm/s
Cycle Life	>2,000,000 cycles
Communication	RS-485, Modbus RTU
Programmable Parameters	Speed, Position, Torque
Feedback	Position
Protection Rating	IP40
Operating Temperature	0-50℃

6.2 Mechanical Dimensions

The mechanical dimensions of the Gripper G2 are shown below, where d is the opening distance between the two fingers and L is the gripper length.

Dimensions in the closed position:

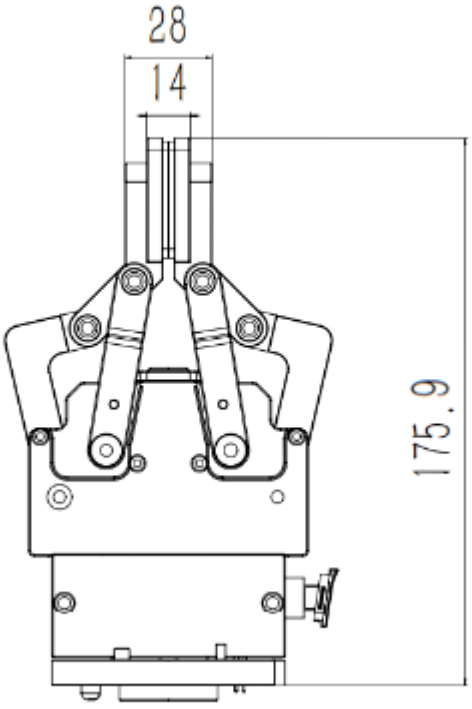

Dimensions in the open position and side view:

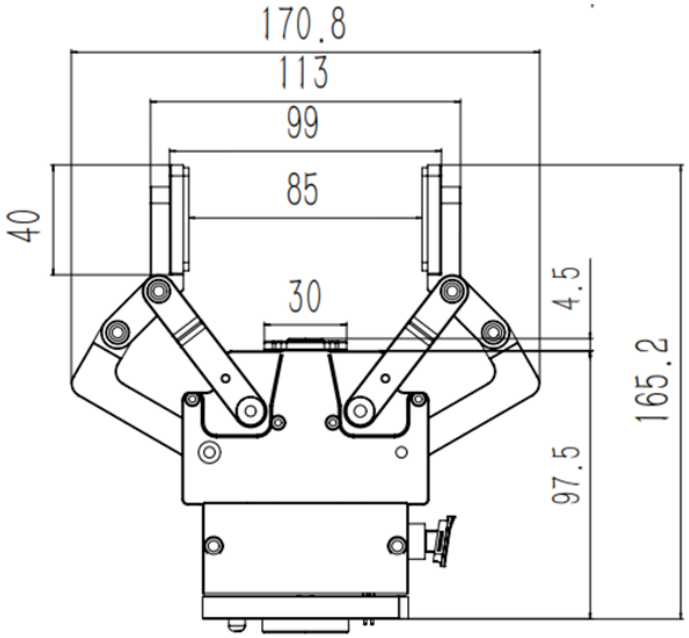

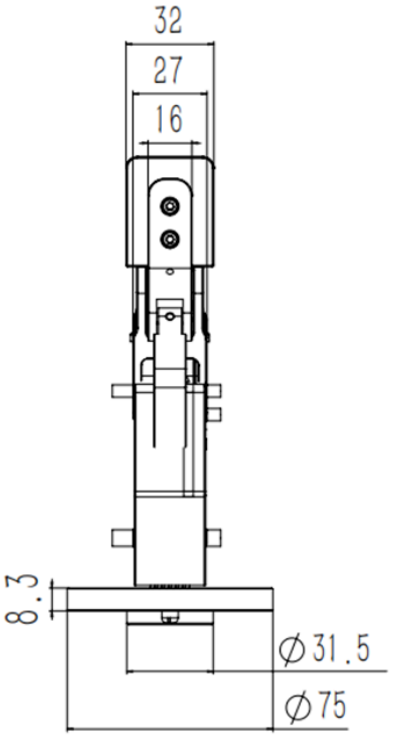

Bottom mounting dimensions:

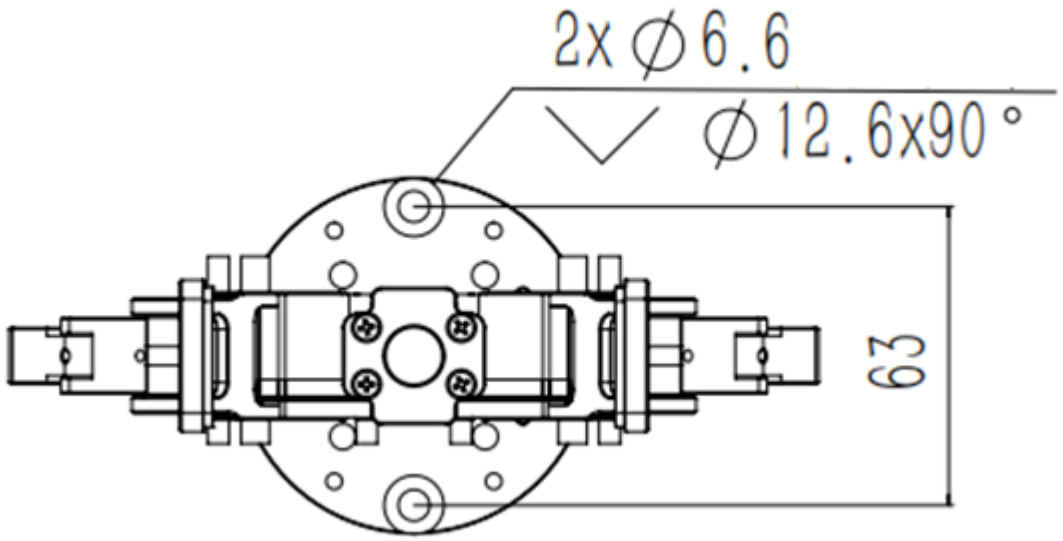

The gripper length L varies with the opening distance d according to the geometric relationship:

$$L = 121.606 + \sqrt{55.000^2 - (0.5d - 8.997)^2}$$

where L and d are in mm. For example, L ≈ 175.9 mm at d = 0 and L ≈ 165.2 mm at d = 85 mm, which agree with the dimensions marked in the figures above.

The curve of L versus d is shown below:

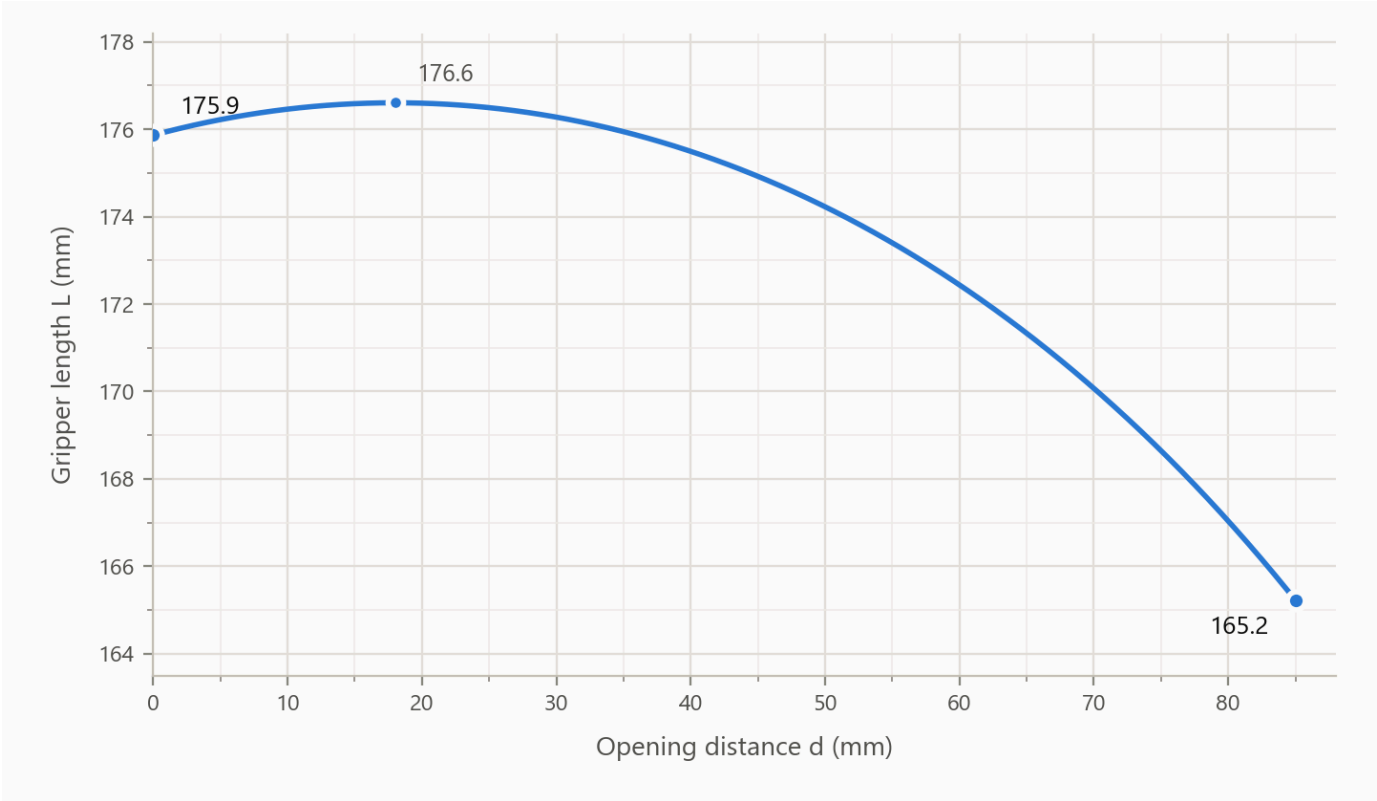

7. After-Sales Service

7.1 After-Sales Policy

For product warranty details and information about repairs/returns, please refer to the official after-sales policy:
UFACTORY Warranty & Returns

7.2 After-Sales Service Process

1. Contact technical support (support@ufactory.cc) to confirm product return requirements and determine components needing repair.
2. We will evaluate warranty status according to the after-sales policy and perform repairs either free or paid.
3. After repair and testing, we will return the product. Typically, the entire repair process takes approximately 1-2 weeks.

Note:

1. When returning products for repair, package them securely in boxes to prevent damage during transportation.

8. Appendix - UFACTORY Private TCP Control

Modbus TCP is an application-layer messaging protocol with three frame types: ASCII, RTU, and TCP. Standard Modbus interfaces include RS232, RS422, RS485, and Ethernet, using master/slave communication.

Gripper G2 uses the UFACTORY **Private TCP** protocol, which is similar to but not identical with standard Modbus TCP.

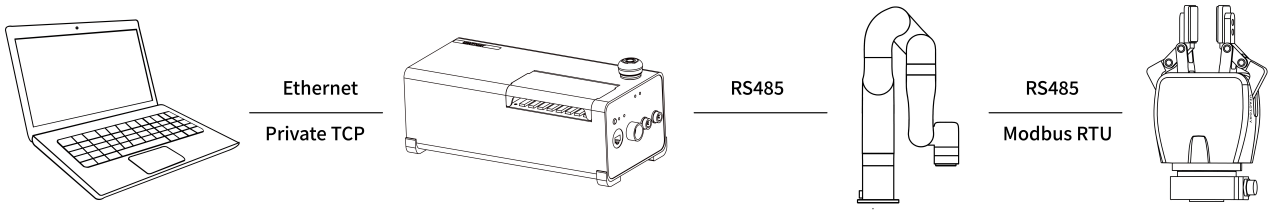

Private TCP communication process:

1. Establish TCP connection
2. Prepare Private TCP message
3. Send message using send command
4. Wait for response on same connection
5. Read response using recv command to complete data exchange
6. Close TCP connection when communication task ends

Parameters: Default TCP port: **502**
Protocol ID: 0x00 0x02 (control - currently only this ID)
All data parsing in this section uses big-endian format.

8.1 Read Registers

	Read Registers		
	Request Format		
Modbus TCP Header	Transaction ID	2 Bytes	0x00, 0x01
	Protocol ID	2 Bytes	0x00, 0x02
	Length	2 Bytes	0x00, 0x08

	Read Registers		
	Register	1 Byte	0x7C
Parameters	Status	1 Byte	0x00
Internal Use	Host ID	1 Byte	0x09
Modbus RTU Data	Gripper ID	1 Byte	0x08
	Function Code	1 Byte	0x03
	Start Address	2 Bytes	**Address**
	Register Count	2 Bytes	**N***
	Response Format		
Modbus TCP Header	Transaction ID	2 Bytes	0x00, 0x01
	Protocol ID	2 Bytes	0x00, 0x02
	Length	2 Bytes	**6+N*x2**
	Register	1 Byte	0x7C
	Status	1 Byte	0x00
Internal Use	Host ID	1 Byte	0x09
Modbus RTU Data	Gripper ID	1 Byte	0x08
	Function Code	1 Byte	0x03
	Byte Count	1 Byte	**N*x2**
	Register Values	Nx2 Bytes	**Value**

Note: N* = Register count

8.2 Write Registers

	Write Registers		
	Request Format		
Modbus TCP Header	Transaction ID	2 Bytes	0x00, 0x01
	Protocol ID	2 Bytes	0x00, 0x02
	Length	2 Bytes	9+Nx2
	Register	1 Byte	0x7C
Internal Use	Host ID	1 Byte	0x09
Modbus RTU Data	Gripper ID	1 Byte	0x08
	Function Code	1 Byte	0x10
	Start Address	2 Bytes	**Address**
	Register Count	2 Bytes	N*
	Byte Count	1 Byte	**N*x2**
	Register Values	N*x2 Bytes	**Value**
	Response Format		
Modbus TCP Header	Transaction ID	2 Bytes	0x00, 0x01
	Protocol ID	2 Bytes	0x00, 0x02
	Length	2 Bytes	0x00, 0x09
	Register	1 Byte	0x7C
Parameters	Status	1 Byte	0x00
Internal Use	Host ID	1 Byte	0x09
Modbus RTU Data	Gripper ID	1 Byte	0x08
	Function Code	1 Byte	0x10
	Start Address	2 Bytes	**Address**
	Register Count	2 Bytes	**N***

8.3 Private TCP Examples

1. Enable gripper. Address (0x0100)

```
Tx: 00 01 00 02 00 0B 7C 09 08 10 01 00 00 01 02 00 01
Rx: 00 01 00 02 00 09 7C 00 09 08 10 01 00 00 01
```

2. Set gripper position to 400. Address (0x0700)

```
Tx: 00 01 00 02 00 0D 7C 09 08 10 07 00 00 02 04 00 00 01 90
Rx: 00 01 00 02 00 09 7C 00 09 08 10 07 00 00 02
```

3. Read error code. Address (0x000F)

```
Tx: 00 01 00 02 00 08 7C 09 08 03 00 0F 00 01
Rx: 00 01 00 02 00 08 7C 30 09 08 03 02 00 00
```

4. Set gripper enable, position(850), speed(3000), force(50). Address (0x0Cxx)

```
Tx: 00 01 00 02 00 11 7C 09 08 10 0C 00 00 05 0A 00 01 0B B8 00 32 03 52
Rx: 00 01 00 02 00 09 7C 30 09 08 10 0C 00 00 05
```