UFACTORY

BIO GRIPPER G2 USER MANUAL

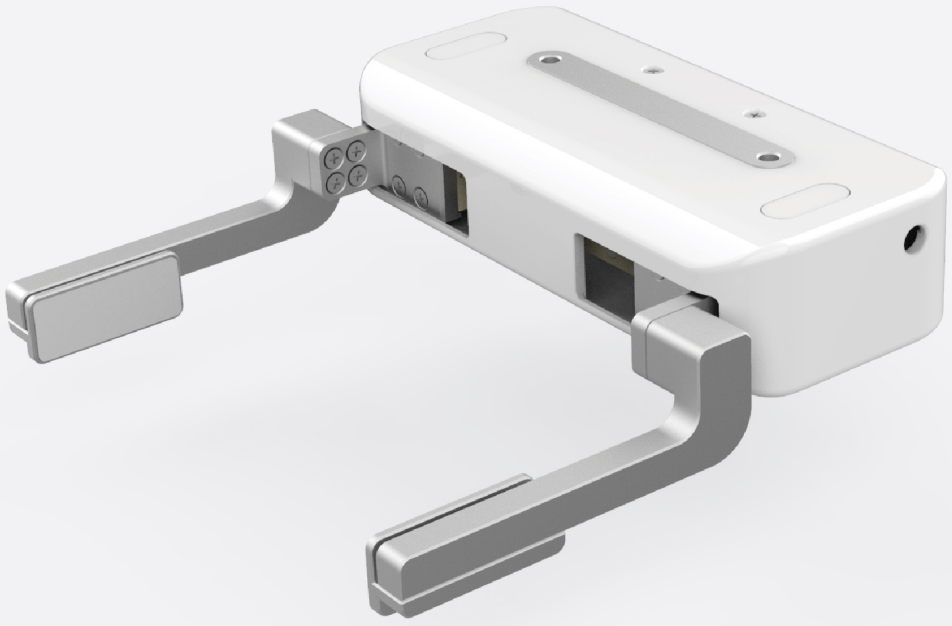

SHENZHEN UFACTORY CO., LTD.

V 2.8.0

1.Introduction

The BIO Gripper G2 is a parallel gripper designed for the handling of liquid plates, characterized by quick installation and simple application. The fingers provide excellent gripping power and flexibility.

The fingers of the BIO Gripper G2 can be freely customized for handling different shapes of tubes and plates.

1.1 Work range

BIO Gripper G2 default range: 71-150mm.

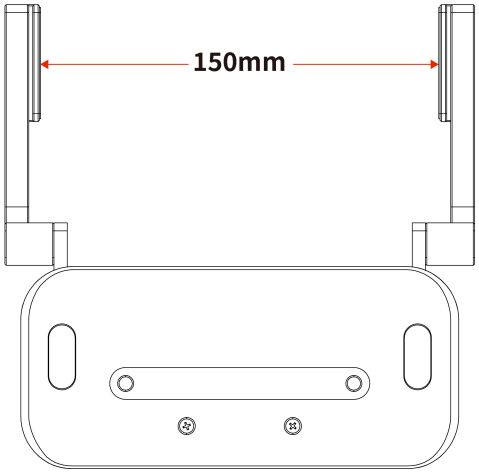

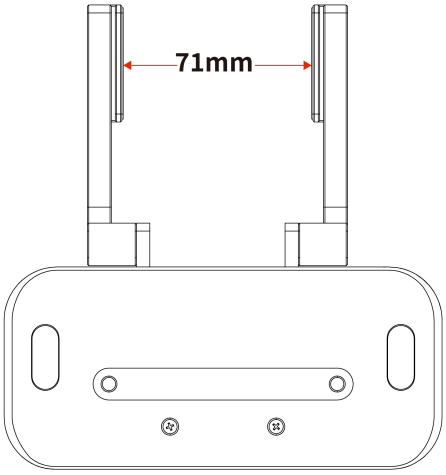

BIO Gripper G2 finger reverse range: 4-83mm

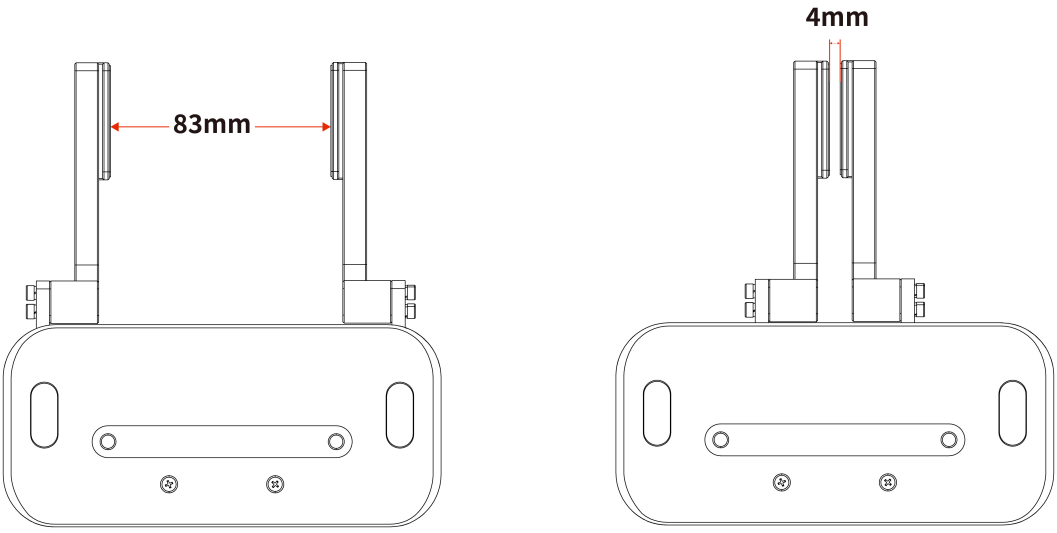

1.2 Setup and Control

The BIO Gripper G2 is powered and controlled directly via a cable for 24V DC power supply and RS-485 based Modbus RTU communication.

1.3 Safety

Warning

- The operator must have read and understood all instructions in the manual before using the BIO Gripper.
- The Gripper needs to be properly secured before operating the robot.
- Do not install or operate a Gripper that is damaged or lacking parts.
- Never supply the Gripper with an alternative current (AC) source.
- Make sure all cord sets are always secured at both ends,Gripper end & Robot end
- Always satisfy the recommended keying for electrical connections.
- Be sure no one is in the robot and/or gripper path before initializing the robot's routine.
- Always satisfy the gripper payload.
- Set the gripper speed accordingly, based on your application.

- Keep fingers and clothes away from the gripper while the power is on.
- Do not use the gripper on people or animals.
- Gripper are not suitable for applying force to objects or surfaces.

Note

The term "operator" refers to anyone responsible for any of the following operations on the BIO Gripper:

- Installation
- Control
- Maintenance

This document describes the general operation of the BIO Gripper G2 its life cycle, from installation to operation to use.
The graphics and photographs in this document are representative examples and there may be differences between them and the delivered product.

The BIO Gripper G2 is meant to be used on an industrial robot. The robot, gripper and any other equipment used in the final application must be evaluated with a risk assessment. The robot integrator must ensure that all local safety measures and regulations are respected. Depending on the application, there may be risks that need additional protection/safety measures, for example, the work-piece the gripper is manipulating may be inherently dangerous to the operator.

Info

Always comply with local and/or national laws, regulations and directives on automation safety and general machine safety

The unit may be used only within the range of its technical data. Any other use of the product is deemed improper and unintended use.

UFACTORY will not be liable for any damages resulting from any improper or unintended use.

2.Installation

Warning

Before installing:

Read and understand the safety instructions related to the BIO Gripper.

Verify your package according to the Scope of delivery and your order info.

Have the required parts, equipment and tools listed in the requirements readily available.

Installing:

Satisfy the environmental conditions.

Do not operate the Gripper, or even turn on the power supply, before it is firmly anchored and the danger zone is cleared.

Caution the fingers of the gripper which may move and cause injury or damage.

2.1 General Kit

A Gripper Kit generally includes these items:

- BIO Gripper G2 (1)
- BIO Gripper G2 adapter plate(1)
- Cross countersunk head screws M6*8 (4)
- Cross countersunk head screws M6*10 (6)
- Cross countersunk head screws M6*12 (4)

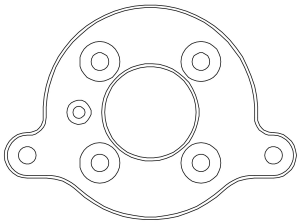

BIO Gripper G2 Adapter Plate

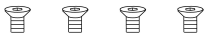

Cross countersunk head screws M6*8(4)

Cross countersunk head screws M6*10(6)

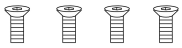

Cross countersunk head screws M6*12(4)

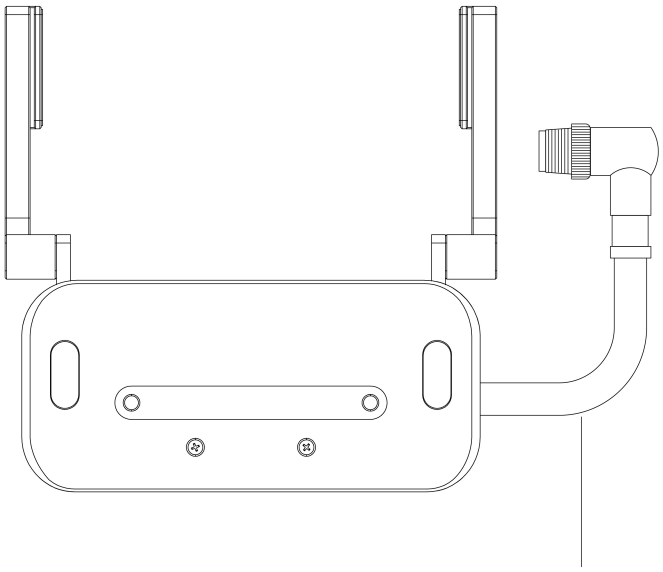

BIO Gripper G2

Gripper Connection Cable

2.2 Mechanical Installation

BIO Gripper installation steps:

1. Fix the BIO Gripper G2 adapter plate to the tool flange of the robotic arm with screws.
2. Fix the BIO Gripper G2 to the BIO Gripper adapter plate with screws.
3. Connect the robotic arm and the Gripper with the gripper connection cable.

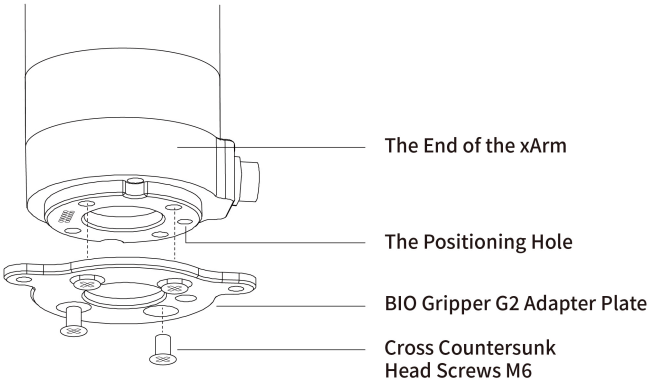

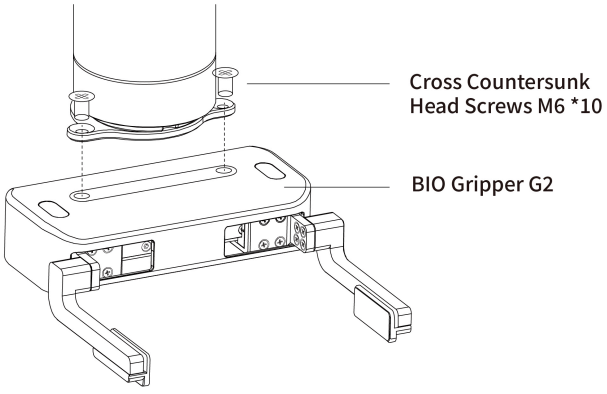

Note:

1. When wiring the gripper connection cable, be sure to power off the robotic arm, the emergency stop button is in the pressed state and the power indicator of the robotic arm is off, so as to avoid robotic arm failure caused by hot plugging;
2. When connecting the gripper and the robotic arm, be sure to align the positioning holes at the ends of the gripper and the robotic arm. Since the male pins of the gripper connection cable are relatively thin, avoid bending the male pins during plugging.

2.3 Electrical Setup

Power and communication are established with the BIO Gripper via a single gripper connection cable. The gripper connection cable provides a 24V power supply to the Gripper and enables serial RS485 communication to the robot control box.

Warning

Power must be off before connecting the Gripper and the robotic arm via the gripper connection cable

2.3.1 Pinout Interface

The BIO Gripper is connected to the tool end of the robotic arm via a 12-pin connector.

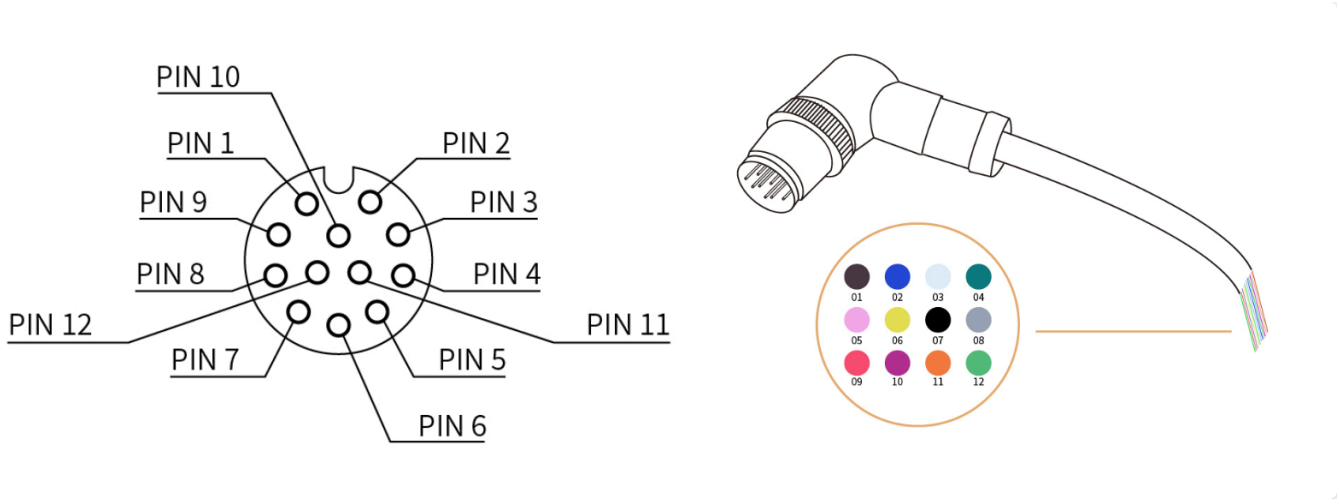

Pin sequence	Function
1	24V
2	24V

Pin sequence	Function
3	GND
4	GND
5	485-A
6	485-B
7	Digital Input 0
8	Digital Input 1
9	Digital Output 0
10	Digital Output 1
11	No Connect
12	No Connect

BIO Gripper G2 uses 24V (PIN1 and PIN2), GND (PIN3 and PIN4), 485A (PIN5), 485B (PIN6).

2.4 Indicator Lights

The BIO Gripper G2 provides 2 indicator lights, the power indicator and the status indicator.

- When the gripper is powered up, the power indicator light is always red and the status indicator light flashes green.
- When the gripper clamps something, the status indicator light is always on green.
- When there is an error in the gripper, the status indicator light flashes green rapidly.

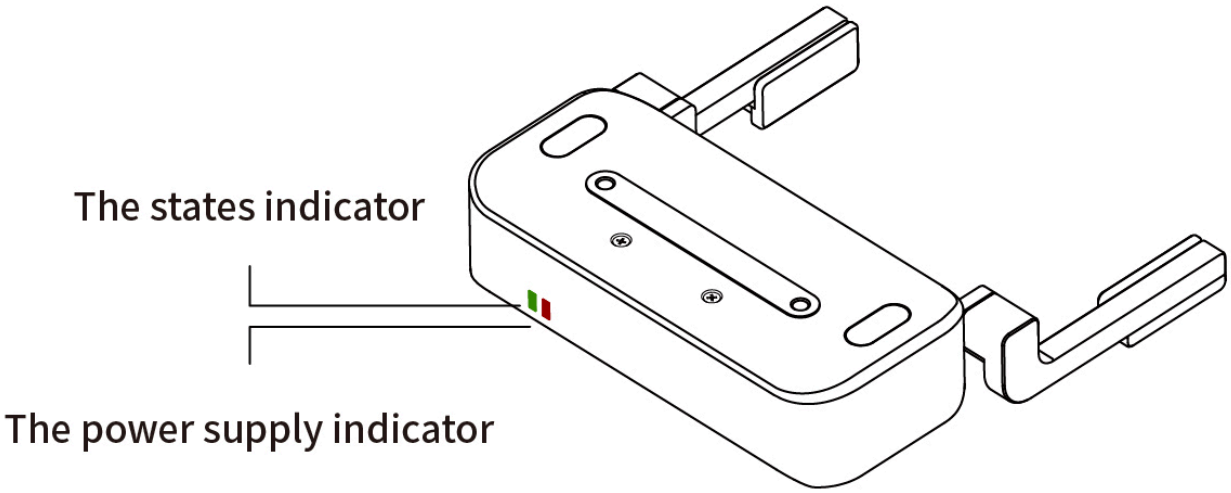
The states indicator
The power supply indicator

3. Control

The BIO Gripper G2 offers two control modes. After switching modes, the gripper needs to be re-enabled.

Mode 0: Open-close mode. (Default mode for BIO Gripper G2)
Mode 1: Position mode. It supports position, force, and speed control.

- Position: 71-150 (mm)
- Speed: 500-4000 (rpm, i.e., motor speed). To convert to the gripper's opening/closing speed: gripper speed (mm/s) = motor speed (rpm) × 5 / 60 (e.g., a setting of 3000 rpm corresponds to a gripper speed of 250 mm/s)
- Force: 1-100 (percentage), The force setting value is expressed as a percentage, so refer to the following chart for the corresponding actual force.

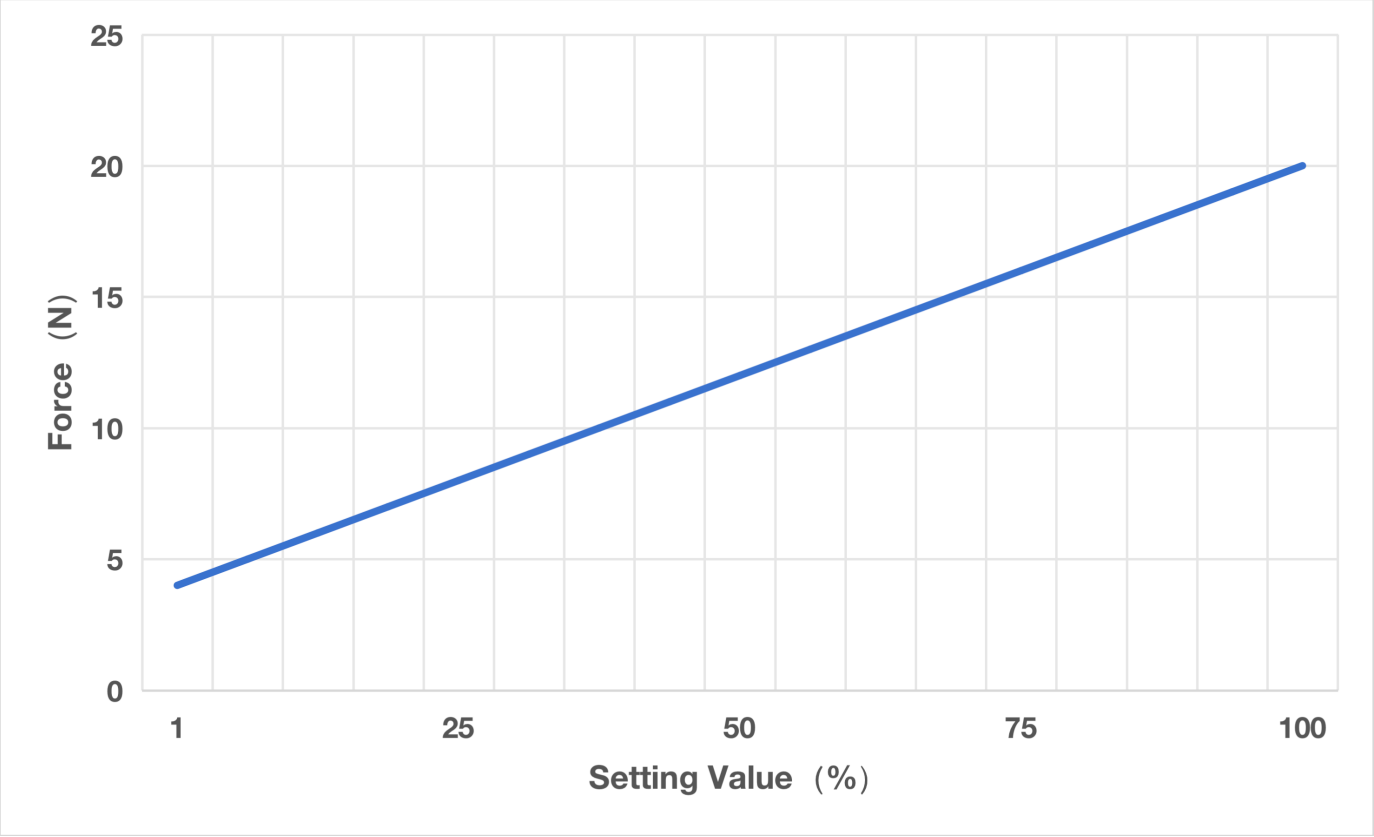

3.1 UFactory Studio Control

Set up BIO Gripper G2

Enter Settings-Motion-TCP. Select the end effector: xArm BIO G2 Gripper

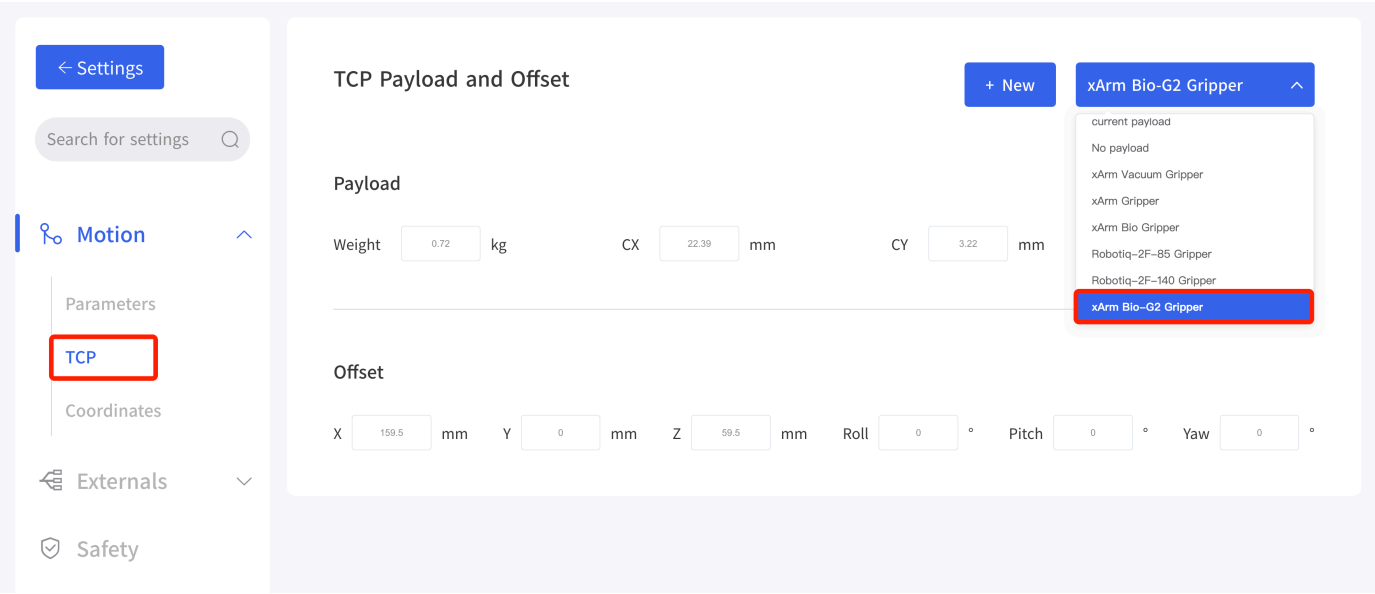

3.1.1 Live Control

Enter the live control interface and select BIO Gripper G2 for enable, speed, force and position control.

Click the upper right button to turn off the position and force control (switching mode).

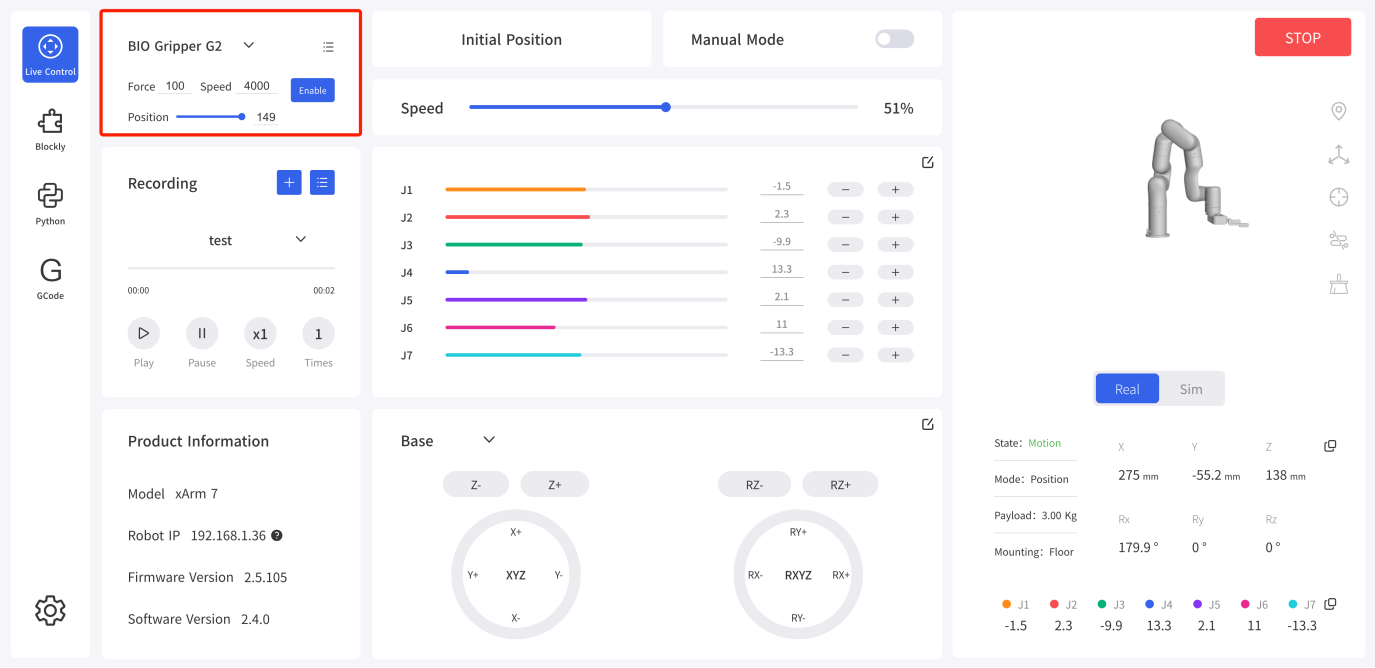

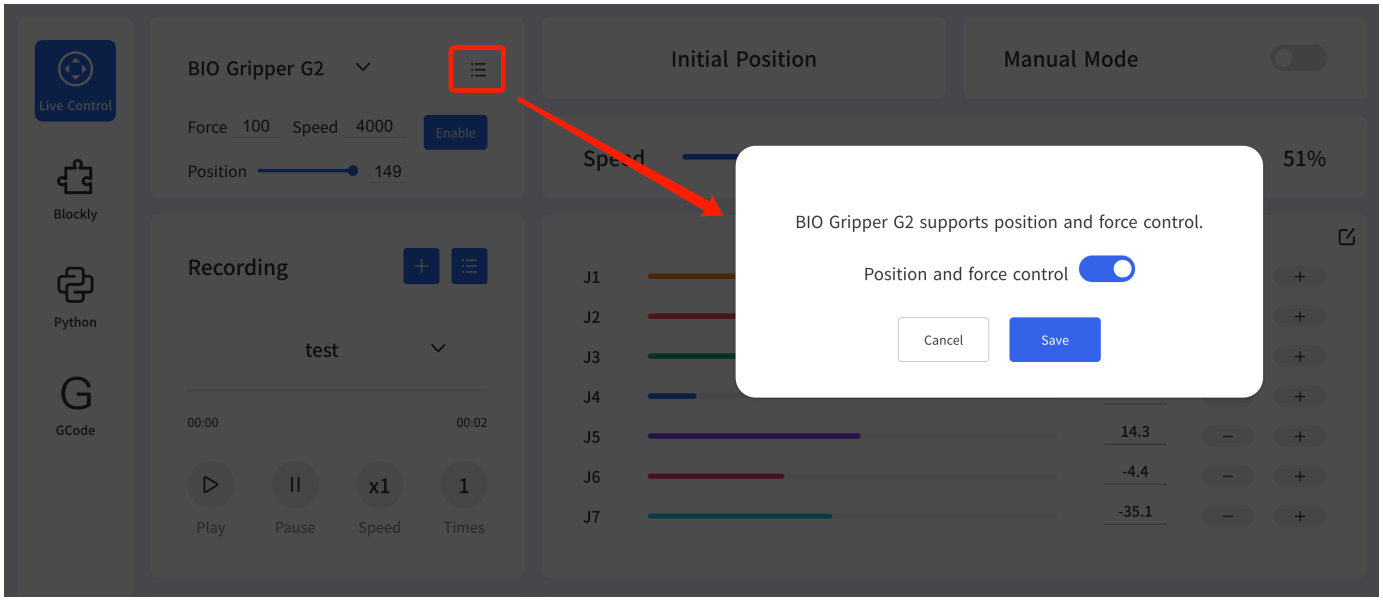

3.1.2 Blockly Control

Blockly provides 3 blocks to control the BIO Gripper G2:

- Initialize the BIO gripper G2.
- Setting up the BIO Gripper G2, parameters: position, speed, force, wait or not.
- Detect that BIO Gripper G2 has clamped an object, parameter: timeout time.

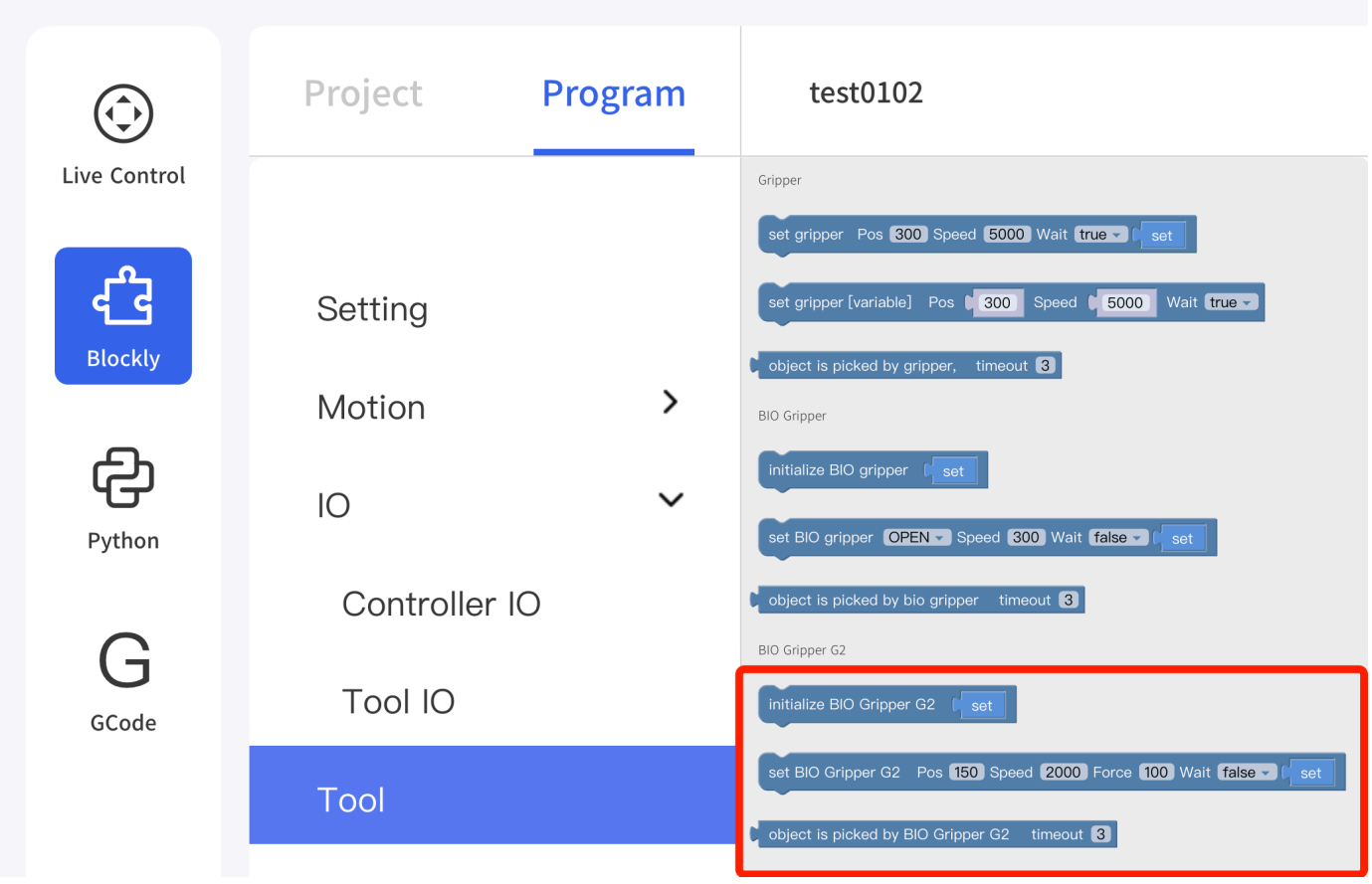

- Control the BIO Gripper G2 through Blockly programming. [blockly example]

3.1.3 Modbus RTU Control

Enter to Set-Externals -Modbus RTU page and send the corresponding Modbus RTU commands for control.

For Modbus communication protocol, please refer to [Modbus-RTU Communication Protocol Control]

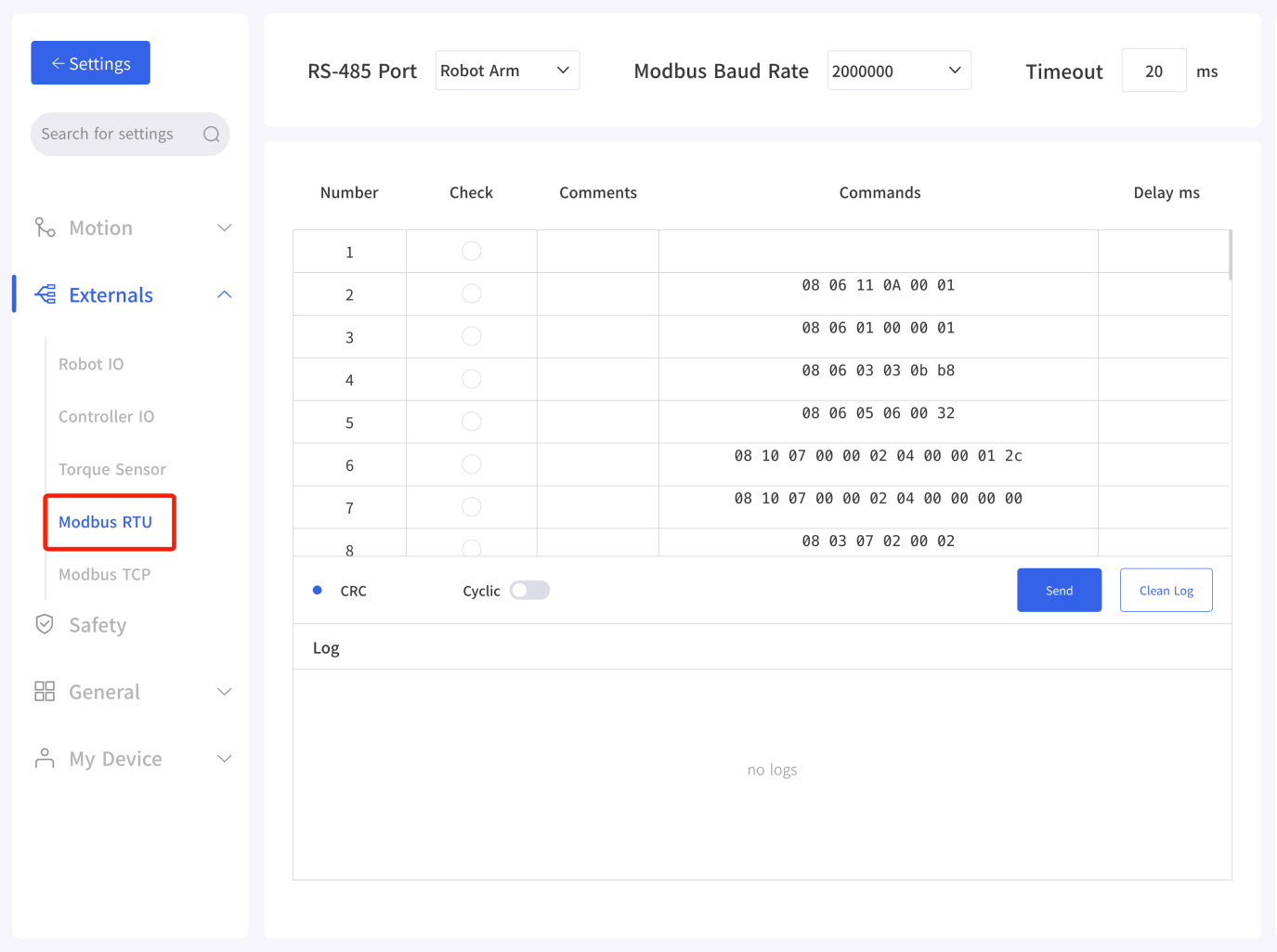

3.1.4 Private TCP Control

Enter to Set-Externals -Modbus TCP,select the "UFACTORY Private TCP",Send the appropriate private TCP commands for control

For Modbus communication protocol, please refer to [UFACTORY Private TCP protocol control]

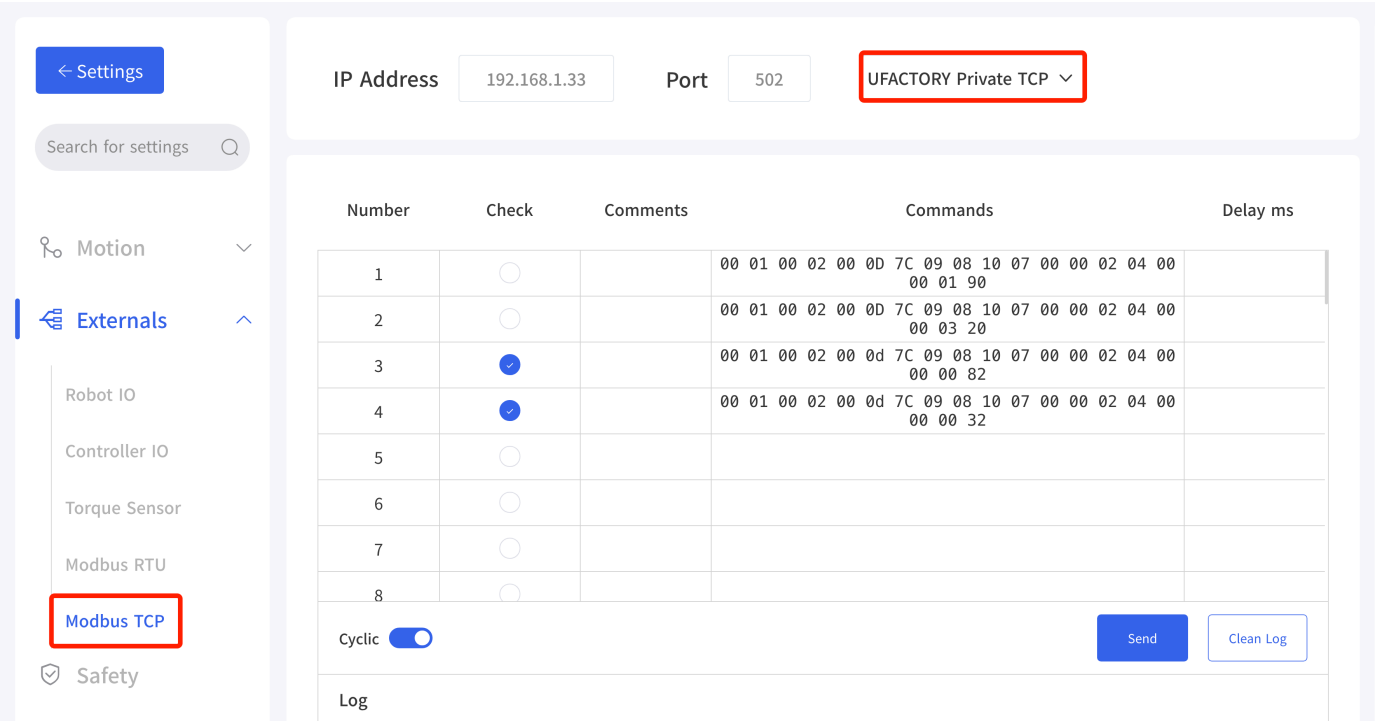

3.2 Python-SDK Control

3.2.1 Mode 0:Open-Close Mode(default)

Common interfaces are listed below:

`set_bio_gripper_enable` : Enable BIO Gripper G2

`set_bio_gripper_speed` : Set BIO Gripper G2 Speed

`open_bio_gripper` : Open BIO Gripper G2

`close_bio_gripper` : Close BIO Gripper G2

For details on controlling Gripper with Python-SDK, please refer to the link below:

[Python-SDK Example]

3.2.2 Mode 1:Position Mode

Common interfaces are listed below:

`set_bio_gripper_enable` : Enable BIO Gripper G2

`set_bio_gripper_control_mode(mode=1)` : Switch to Position Mode

`set_bio_gripper_position` : Controls the position, force and speed of the BIO Gripper G2

Python Example:

```python
import os
import sys
import time
sys.path.append(os.path.join(os.path.dirname(__file__), '../../..'))

from xarm.wrapper import XArmAPI

arm = XArmAPI('192.168.1.204')
arm.motion_enable(True)
arm.clean_error()
arm.set_mode(0)
arm.set_state(0)
time.sleep(1)

code = arm.set_bio_gripper_control_mode(mode=1)
print('set_bio_gripper_mode,code={}'.format(code))

code = arm.set_bio_gripper_enable(True)
print('set_bio_gipper_enable,code={}'.format(code))

while True:
    code = arm.set_bio_gripper_position(150, speed=3000, force=50)
    print('set_bio_gripper_position,code={}'.format(code))
    time.sleep(0.2)
    code = arm.set_bio_gripper_position(71, speed=3000, force=100)
    print('set_bio_gripper_position,code={}'.format(code))
    time.sleep(0.2)
```

4.Modbus-RTU Communication Protocol Control

4.1 Register Address Description

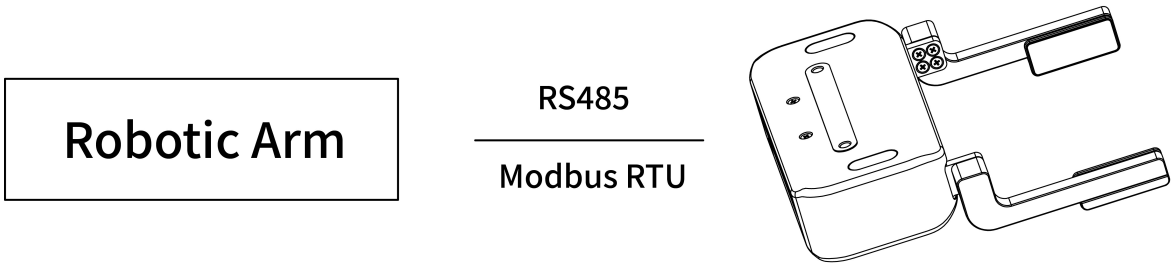

The gripper defaults to the standard Modbus RTU protocol at a default baud rate is 2Mbps and the slave ID is 0x08. The currently supported function codes are: 0x03 / 0x10. In this article, data analysis is big-endian analysis.

- 0x03: Read registers
- 0x06: Write Single Register
- 0x10: Write multiple registers

Read：

Address	description
0x0000	motion state
0x0001	speed（r/min）
0x0002	percentage of current
0x0003	current
0x0004	command position
0x0006	motor position
0x0008	position error
0x000F	current alarm code

Write：

Address	Description	Range	Unit	Factory Setting
0x0100	Enable	0-1;		0
0x010A	Mode	0-2； 0：opening and closing mode 1：position mode。		0
0x0303	Speed	0-4000	r/min	1000
0x0505	Clip Detection Threshold	30-100	0.01A	50
0x0506	Holding Current Limit (force)	10-100	0.01A	50
0x0508	Drop Detection Threshold	500-2000	r/min	1000
0x0601	Baud Rate	0: 4800 1: 9600 2: 19200 8: 921600 9: 1M 10: 1.5M 11: 2M	bps	11
0x0700	Position Command High	0-0xFFFF	-	0
0x0701	Position Command low	0-0xFFFF	-	0
0x0702	Position Feedback High	0-0xFFFF	-	read-only
0x0703	Position Feedback Low	0-0xFFFF	-	read-only

motion state（0x0000）

bit1:0	00：stop state	bit3:2	00：not enable
	01： motion state		10：enable state
	10：clamping state		
	11: there's an error in the gripper		

4.2 Read BIO Gripper Register

Register Function

	Read Register		
Request			
Modbus RTU Data	Slave ID (Gripper)	1 Byte	0x08
	Function Code	1 Byte	0x03
	Register Starting Address	2 Bytes	**Address**
	Quantity of Register	2 Bytes	**N***
	Modbus CRC16	2 Bytes	**CRC***
Response			
Modbus RTU Data	Slave ID	1 Byte	0x08
	Function Code	1 Byte	0x03
	Byte Count	1 Byte	**N*x2**
	Registers Value	**N*x2** Bytes	**Value**
	Modbus CRC16	2 Bytes	**CRC***

N* = Quantity of Registers

Address = Register Starting Address

CRC* = Cyclic Redundancy Check

Resgister

	Resgister Starting Address	Register Value	
Get Gripper status Register	0x0000	2 Bytes	**Disabled:** 0x0000 **Enabling:** 0x0004 **Enabling completed:** 0x0008**Stop status**: 0x0008 **Motion status:** 0x0009**Clipping status:** 0x000A **Error status:** 0x000B
Get Gripper Error Register	0x000F	2 Bytes	**An error occurs:** all other return values indicate an error(except 0)**No error occurred:** 0x0000

4.3 Write BIO Gripper Register

Register Function

	Write Register		
Request			
Modbus RTU Data	Slave ID (Gripper)	1 Byte	0x08
	Function Code	1 Byte	0x10
	Register Starting Address	2 Bytes	**Address**
	Quantity of Register	2 Bytes	**N***
	Byte Count	1 Byte	**N*x2**
	Registers Value	**N*x2** Bytes	**Value**
	Modbus CRC16	2 Bytes	**CRC***
Response			
Modbus RTU Data	Slave ID	1 Byte	0x08
	Function Code	1 Byte	0x10
	Register Starting Address	2 Bytes	**Address**

	Write Register		
	Quantity of Registers	2 Bytes	**N***
	Modbus CRC16	2 Bytes	**CRC***

N* = Quantity of Registers

Address = Register Starting Address

CRC* = Cyclic Redundancy Check

Resgister:

	Resgister Starting Address	Register Value	
Enable/Disable Gripper Register	0x0100	2 Bytes	**Enable :** 0x0001 **Disable :** 0x0000
Set Gripper Position Register	0x0700	4 Bytes	**Open the Gripper :** 0x0000 0x0082 **Close the Gripper :** 0x0000 0x0032
Set Gripper Speed Register	0x0303	2 Bytes	0x0000-0x0BB8 **unit**: r/min
Clear Error Register	0x000F	2 Bytes	0x0000

4.4 Modbus RTU Example

Use Modbus RTU to control BIO Gripper G2 opening and closing, mode 1.

1. Set the Bio Gripper G2 mode 1. Address: 0x010A. Last two digits are CRC: 6D AD, still effective after power off.

```
Send: 08 06 11 0A 00 01 6D AD
Response: 08 06 11 0A 00 01 6D AD
```

2. Enable the Gripper。Address：0x0100。

```
Send: 08 06 01 00 00 01 49 6F
Response: 08 06 01 00 00 01 49 6F
```

3. Open the Gripper. Position:150，Speed: 3000，Force:50。

```
Set speed:3000
Send: 08 06 03 03 0b b8 7E 55
Response: 08 06 03 03 0b b8 7E 55

Set force:50（percentage）
Send: 08 06 05 06 00 32 E8 4B
Response: 08 06 05 06 00 32 E8 4B

Open Bio gripper G2 to 150, The location of the send needs to be converted: （150-70）*
Send: 08 10 07 00 00 02 04 00 00 01 2c FB 4E
Response: 08 10 07 00 00 02 40 25
```

4. Close the Gripper. Position:71。

```
Send: 08 10 07 00 00 02 04 00 00 00 00 FB 03
Response: 08 10 07 00 00 02 40 25
```

5. Read the Bio Gripper G2 position。

```
position:71
Send: 08 03 07 02 00 02 64 26
Response: 08 03 04 00 00 00 00 63 33
```

6. Read Error Codes. Address：0x000F

```
Send: 08 03 00 0F 00 01 B4 90
Response: 08 03 02 00 00 64 45
```

5. Error Handling

5.1 Error Code

Error code	Description	Error handling
BG01	FOC Run Timeout	BIO Gripper FOC run timeout, please clear the error and retry.
BG02	Over Pressure Protection	BIO gripper over pressure, please contact technical support.
BG03	Undervoltage protection	BIO gripper gripper undervoltage, please contact technical support.
BG04	Overheating Protection	BIO Gripper overheating, please contact technical support.
BG05	Startup Failure	BIO Gripper startup failure, please contact technical support.
BG06	Speed Feedback Failure	BIO gripper speed feedback fault, please contact technical support.
BG07	Overcurrent Protection	BIO gripper overcurrent, please contact technical support.
BG08	MCSDK Software Error	BIO gripper MCSDK software error, please contact technical support.
BG09	Drive Protection	BIO Gripper drive protection, please contact technical support.
BG11	Gripper Overcurrent	BIO Gripper current is too high. Please click 'Confirm' to re-enable the gripper. If the error is reported repeatedly, please contact technical support.
BG12	Gripped Object Slipped	BIO Gripper Error. the BIO gripper gripped object slipped, please clear the error and retry.

5.2 Error Handing

5.2.1 Cleaning errors with UFACTORY Studio

1. Re-powering the robotic arm via the emergency stop button on the control box.
2. Enable robotic arm. xArm Studio enable mode: Click the guide button of the error pop-up window or the 'Enable' blue button in the upper right corner.
3. Re-enable the gripper: Select the BIO gripper G2 and click 'Enable'.

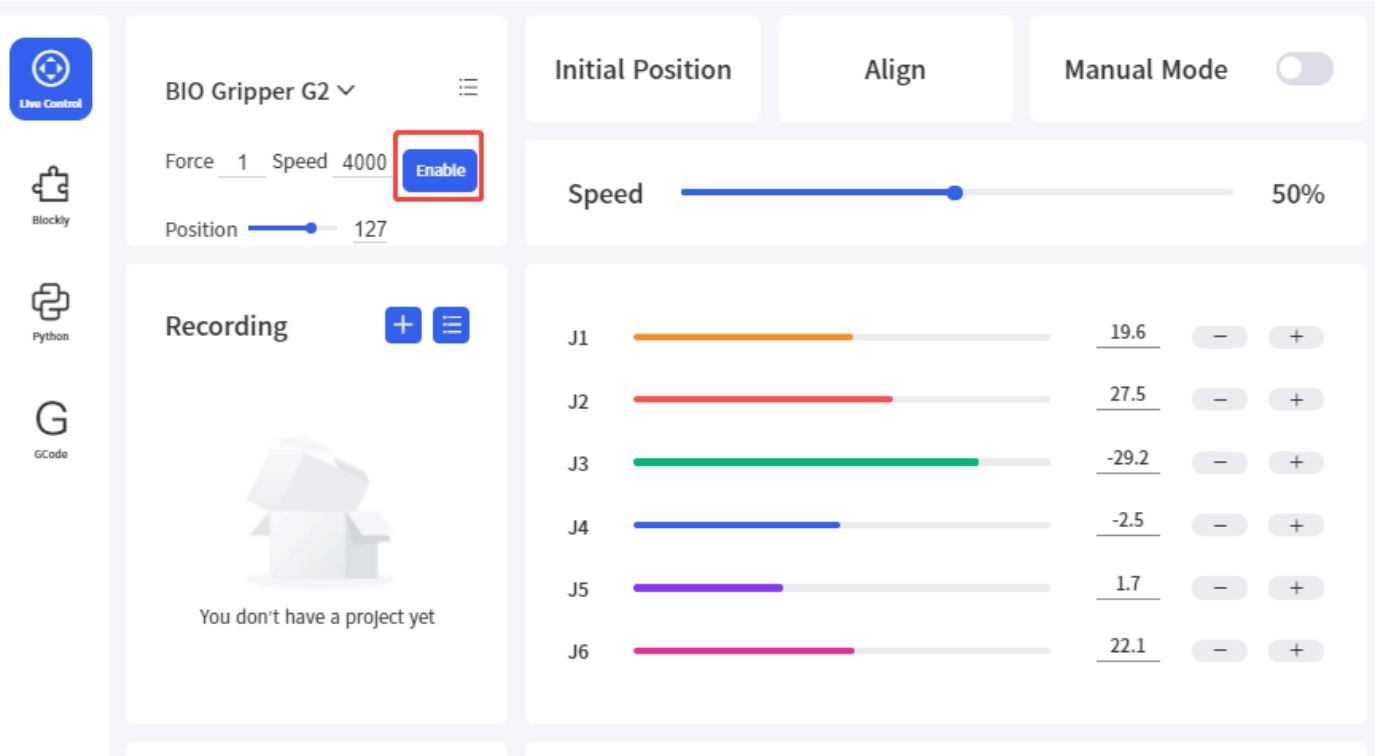

5.2.2 Cleaning errors with xArm-Python-SDK

When designing the robotic arm motion path with the Python library, if the robotic arm error (see Appendix for Alarm information) occurs, then it needs to be cleared manually. After clearing the error, the robotic arm should be motion enabled. Python library error clearing steps: (Please check GitHub for details on the following interfaces)

Clear the error step:

1. Re-powering the robotic arm via the emergency stop button on the control box.
2. Error clearing: `clean_error()`
3. Re-enable the robotic `arm: motion_enable(enable=True)`
4. Set the motion state: `set_state(0)`
5. Set the motion mode: `set_mode(0)`
6. Enable BIO Gripper G2: `set_bio_gripper_enable(enable=True)`

Python Example:

```python
import os
import sys
import time

sys.path.append(os.path.join(os.path.dirname(__file__), '../../..'))

from xarm.wrapper import XArmAPI

arm = XArmAPI('192.168.1.75')
arm.clean_error() #clean error
arm.motion_enable(enable=True) #re-enable the robotic
arm.set_mode(0) #set motion mode
arm.set_state(0) #set motion state
arm.set_bio_gripper_enable(enable=True) #enable bio gripper G2
```

6.Technical Specifications

BIO Gripper G2(AB1100)	Specifications
Rated Supply Voltage	24V DC
Absolute Maximum Supply Voltage	28V DC
Static Power Consumption	0.72W
Peak Current	1.5A
Weight	790g(including adapter)
Maximum Gripping Force	20N
Stroke	80mm
Working Range (with default fingers)	71-150mm(Fingers can be switchable)
Communication Mode	RS-485
Communication Protocol	Modbus RTU
Programmable Gripping Specification	Speed (500-4000rpm), Position (71-150mm), Clamping force (1-100%)
Status Indication	Working Status, Power
Feedback	Drop Detection, Pick-up Detection

7.After-sales Service

1. **After-sales policy:**

   - For the detailed after-sales policy of the product, see the official website: UFACTORY Warranty & Returns

2. **General process of after-sales service:**

   - Contact UFACTORY technical support (support@ufactory.cc) to confirm whether the product needs to be repaired and which part should be sent back to UFACTORY.
   - After the bill of lading on UPS, UFACTORY will send the invoice and label to you by mail. You need to make an appointment with the local UPS and then send the product to UFACTORY.
   - UFACTORY will check the product warranty status according to the after-sales policy.
   - Generally, the process takes around 1-2 weeks except for shipment.

Note: When you need to send the product back to us for repair, it is necessary to box the product to avoid unnecessary collisions during transport, which may cause damage to the BIO Gripper G2.

8.Appendix-UFACTORY Private TCP protocol control

This section mainly explains how to control the BIO Gripper G2 by using the Modbus-TCP protocol through xArm control box.

8.1 UFACTORY Private TCP protocol

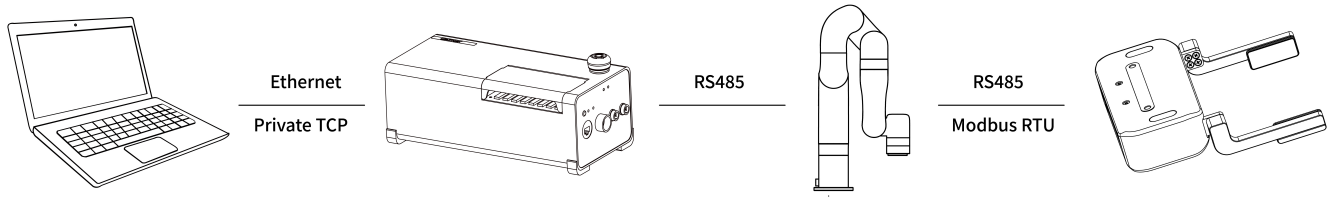

8.1.1 Register Address Description

Refer to [4.Modbus-RTU Communication Protocol Control]

Modbus-TCP:

Modbus protocol is an application layer message transmission protocol, including three message types: ASCII, RTU, and TCP. The standard Modbus protocol physical layer interface includes RS232, RS422, RS485 and Ethernet interfaces, and adopts master / slave communication.

The BIO Gripper G2 supports the private TCP protocol, which is similar but not identical to the standard Modbus TCP.

Private Modbus TCP Communication Process:

1. Establish a TCP connection
2. Prepare Modbus messages
3. Use the send command to send a message
4. Wait for a response under the same connection
5. Use the recv command to read the message and complete a data exchange
6. When the communication task ends, close the TCP connection

Parameter:

- Default TCP Port: 502

- Protocol: 0x00 0x02

On the problem of users using communication protocols to organize data in big endian and little endian:

In this article, data analysis is **big-endian** analysis.

8.1.2 Read BIO Gripper Register

Register Function

Read Register			
Request			
MBTP Header	Transaction Identifier	2 Bytes	0x0001
	Protocol Identifier	2 Bytes	0x0002
	Length	2 Bytes	**6+N*x2**
	Unit Identifier	1 Byte	0x7C
Internal Use	Internal Use	1 Byte	0x09
Modbus RTU Data	Slave ID (Gripper)	1 Byte	0x08
	Function Code	1 Byte	0x03
	Register Starting Address	2 Bytes	**Address**
	Quantity of Registers	**N*x2** Bytes	**N***
Response			
MBTP Header	Transaction Identifier	2 Bytes	0x0001
	Protocol Identifier	2 Bytes	0x0002
	Length	2 Bytes	**6+N*x2**
	Unit Identifier	1 Byte	0x7C
	Status Value	1 Byte	0x00
Internal Use	Internal Use	1 Byte	0x09

Read Register			
Modbus RTU Data	Slave ID	1 Byte	0x08
	Function Code	1 Byte	0x03
	Byte Count	1 Byte	**N*x2**
	Registers Value	**N*x2** Bytes	**Value**

N* = Quantity of Registers

Address = Register Starting Address

Register Function

	Resgister Starting Address	Registers Value	
Get Gripper status Register	0x0000	2 Bytes	**Disabled:** 0x0000 **Enabling:** 0x0004 **Enabling completed:** 0x0008 **Stop status**: 0x0008 **Motion status:** 0x0009 **Clipping status:** 0x000A **Error status:** 0x000B
Get Gripper Error Register	0x000F	2 Bytes	**An error occurs:** all other return values indicate an error(except 0)**No error occurred:** 0x0000

8.1.3 Write BIO Gripper Register

	Write Register		
Request			
MBTP Header	Transaction Identifier	2 Bytes	0x0001
	Protocol Identifier	2 Bytes	0x0002
	Length	2 Bytes	**9+N*x2**
	Unit Identifier	1 Byte	0x7C
Internal Use	Internal Use	1 Byte	0x09

	Write Register		
Modbus RTU Data	Slave ID (Gripper)	1 Byte	0x08
	Function Code	1 Byte	0x10
	Register Starting Address	2 Bytes	**Address**
	Quantity of Registers	2 Bytes	**N***
	Byte Count	1 Byte	**N*x2**
	Registers Value	**N*x2** Bytes	**Value**
Response			
MBTP Header	Transaction Identifier	2 Bytes	0x0001
	Protocol Identifier	2 Bytes	0x0002
	Length	2 Bytes	0x0009
	Unit Identifier	1 Byte	0x7C
	Status Value	1 Byte	0x00
Internal Use	Internal Use	1 Byte	0x09
Modbus RTU Data	Slave ID	1 Byte	0x08
	Function Code	1 Byte	0x10
	Register Starting Address	2 Bytes	**Address**
	Quantity of Registers	2 Bytes	**N***

N* = Quantity of Registers

Address = Register Starting Address

Resgister:

	Resgister Starting Address	Register Value	
Enable/Disable Gripper Register	0x0100	2 Bytes	**Enable :** 0x0001 **Disable :** 0x0000
Set Gripper Position Register	0x0700	4 Bytes	**Open the Gripper :** 0x0000 0x0082 **Close the Gripper :** 0x0000 0x0032
Set Gripper Speed Register	0x0303	2 Bytes	0x0000-0x0BB8
Clear Error Register	0x000F	2 Bytes	0x0000

8.1.4 Private TCP Example

Use private TCP to control BIO Gripper G2 opening and closing, mode 0.

1. Set the Bio Gripper G2 mode 0. Address: 0x010A, still effective after power failure.

```
Send: 00 01 00 02 00 08 7C 09 08 06 11 0A 00 00
Response: 00 01 00 02 00 09 7C 50 09 08 06 11 0A 00 00
```

2. Enable the Gripper. Address: 0x0100

```
Send: 00 01 00 02 00 0B 7C 09 08 10 01 00 00 01 02 00 01
Response: 00 01 00 02 00 09 7C 50 09 08 10 01 00 00 01
```

3. Open the Gripper

```
Mode 0 has no position control, sending position > 90, then opens the Bio Gripper G2. (

Send: 00 01 00 02 00 0d 7C 09 08 10 07 00 00 02 04 00 00 00 82
Response: 00 01 00 02 00 09 7C 50 09 08 10 07 00 00 02
```

4. Close the Gripper

```
Mode 0 has no position control and sends a position ≤ 90,then closes the Bio Gripper G2

Send: 00 01 00 02 00 0d 7C 09 08 10 07 00 00 02 04 00 00 00 32
Response: 00 01 00 02 00 09 7C 50 09 08 10 07 00 00 02
```